msc

The State of New Hampshire

Department of Environmental Services

Robert R. Scott, Commissioner

38

October 6, 2025

Her Excellency, Governor Kelly A. Ayotte
and The Honorable Council
State House
Concord, NH 03301

REQUESTED ACTION

Approve Scott C Fuller Development LLC's request to amend NH Department of Environmental Services (NHDES) Wetland Bureau permit #2023-02686, to perform the following work on Lake Winnipesaukee in Moultonborough, in accordance with RSA 482-A:3. This amendment adds four fender piling to the work previously approved by the Governor and Executive Council on February 26, 2025, Item #69. Comments submitted by the Moultonborough Conservation Commission on the project as proposed are addressed in the Findings and are included in the enclosed documents.

Impact 929 square feet of lakebed in order to construct a 63 foot long breakwater oriented diagonally to the shore, install a 4 foot x 49 foot cantilevered pier accessed by a 5 foot x 13 foot walkway, install a set of 5 foot x 9 foot stairs constructed over the bank and install four fender pilings on an average of 119 feet of frontage along the west point of Long Island on Lake Winnipesaukee in Moultonborough.

NHDES imposed the following conditions as part of this approval:

1. In accordance with Env-Wt 307.16, all work shall be done in accordance with the revised plans, revision dated July 8, 2025, by Scott Fuller, as received by the NH Department of Environmental Services (NHDES) on July 23, 2025.
2. This permit shall not be effective until it has been recorded in the Carroll County Registry of Deeds and a copy of the recorded permit has been provided to the department as required pursuant to RSA 482-A:3, and Env-Wt 314.02.
3. In accordance with Env-Wt 512.05(b), no rocks shall be stockpiled in any jurisdictional area.
4. Only those structures shown on the approved plans shall be installed or constructed along this frontage as required per Env-Wt 513.22, (a).
5. All portions of the docking structures, including the breakwater toe -of-slope, shall be located at least 20 feet from the abutting property lines and no watercraft shall be secured to the docking facility such that it crosses over the imaginary extension of the property lines over the surface water as required by RSA 482-A:3, XIII.
6. Owners of permanent docking structures which are not maintained so as to be structurally sound and usable for their intended purpose shall remove those docking structures in accordance with Env-Wt 513.22(c), to prevent hazards to public safety, navigation, and recreation.
7. The owner understands and accepts that should these docking structures be found to have an unreasonable impact on the ability of abutting owners to use and enjoy their properties or the public's right to navigation, passage, and use of the resource for commerce and recreation, the structures shall be subject to removal pursuant to RSA 482-A:1, RSA 482-A:11, II, and Env-Wt 513.03(a).

8. Pursuant to RSA 483-B:9, V(a)(2)(D), (v), this permit does not authorize the removal of trees or saplings within the waterfront buffer that would result in a tree and sapling point score below the minimum required per RSA 483-B:9, V(a)(2)(D), (iv).
9. In accordance with Env-Wt 307.10(c), turbidity controls shall be installed prior to construction and maintained during construction such that no turbidity escapes the immediate dredge area; and remain in place until suspended particles have settled and water at the work site has returned to normal clarity.
10. Pursuant to RSA 482-A:14, RSA 482-A:14-b, and RSA 482-A:14-c, NHDES is authorized to take appropriate compliance actions should it be determined that, based upon additional information which becomes available, any of the structures depicted as "existing" on the plans submitted by or on behalf of the permittee were not previously permitted or grandfathered.

EXPLANATION

NHDES approved this project on August 14, 2025. NHDES supported its decision with the following findings:

1. This is a major impact project per Administrative Rule Env-Wt 512.06(a), construction of a breakwater.
2. The applicant has an average of 119 feet of frontage along Lake Winnipesaukee.
3. A maximum of 2 slips may be permitted on this frontage per Rule Env-Wt 513.12, Frontage Requirements for Private and Non-commercial Docking Structures.
4. The proposed docking facility will provide 2 slips as defined per RSA 482-A:2, VIII, and therefore meets Rule Env-Wt 513.12.
5. The NHDES finds that because the project is not of significant public interest and will not significantly impair the resources of Lake Winnipesaukee a public hearing under RSA 482-A:8 is not required.
6. No concerns were received from abutters related to the project.
7. The applicant and their agent have provided dated video recording of waves in conjunction with wind speed measurements which demonstrate that the site meets the criterion specified in Env-Wt 512.02(b)(2).
8. On October 4, 2023 the department received comments from the Moultonborough Conservation Commission (MCC) identifying potential issues with the dimensions of the proposed dock and breakwater.
9. The plans submitted with the application demonstrate that the proposed breakwater and cantilevered pier meet the approval criteria, including dimension limits, of Env-Wt 512.02 and Env-Wt 513.03.
10. The NHDES finds that the project as proposed and conditioned meets the requirements of RSA 482-A and the Wetlands Program Code of Administrative Rules Chapters Env-Wt 100 - 900. No waivers of RSA 482-A or the Wetlands Program Code of Administrative Rules Chapters Env-Wt 100 - 900 were requested or approved under this permit action.

NHDES Wetlands Bureau permit #2023-02686 application documents are enclosed for review by the Governor and the Executive Council in consideration of this request and in accordance with RSA 482-A:3, II(a), as it is a major project located in New Hampshire public waters.

We respectfully request your approval of this item.

Robert R. Scott
Commissioner

AMENDMENT REQUEST FORM
FOR A WETLANDS APPLICATION OR PERMIT
Water Division/Land Resources Management
Wetlands Bureau

RSA/Rule: RSA 482-A:3, XIV(e)/ Env-Wt 311.13; Env-Wt 314.07

RECEIVED JUL 23 2025 NHDES LAND RESOURCES MANAGEMENT Administrative Only	Administrative Use Only	Administrative Use Only	File No.: 2023-02686 Check No.: 2406 Amount: 24 – Initials:

Any request for an amendment to a wetlands application or permit must be submitted to the Department on this form. An applicant may request an amendment to a pending permit application or an existing permit, provided the proposed change does not constitute a "**significant amendment**." A "**significant amendment**" means an amendment which changes the proposed or previously approved acreage of the permitted fill or dredge area by 20 percent or more, includes a prime wetland, or elevates the project's impact classification. This meaning of "significant amendment" shall not apply to an application amendment that is in response to a request from the Department (RSA 482-A:3, XIV(e)).

SECTION 1 - REQUESTED AMENDMENT TYPE AND AMENDMENT CRITERIA

Does the proposed change constitute a "significant amendment" as provided in RSA 482-A:3, XIV(e) and described above? ☐ Yes ☒ No

If you answered "yes" to the previous question, then you cannot request an amendment using this form and must file a new permit application.

☐ AMENDMENT TO PENDING PERMIT APPLICATION, NHDES FILE NUMBER: (proceed to Section 2)

☒ AMENDMENT TO EXISTING PERMIT NUMBER: 2023-02686 (proceed to Section 3)

SECTION 2 - AMENDMENT TO A PENDING PERMIT APPLICATION

☒ Not applicable

To request an amendment to a pending permit application, the applicant must:

- Submit the information required by Env-Wt 311.03, showing the changes prior to the Department's issuance of a final decision on the application, including but not limited to, a revised set of plans and revised application fees for any additional square footage of impacts calculated pursuant to RSA 482-A:3, I(b) or (c) as applicable, and
- Provide notice to each person to whom notice of the original application was sent prior to filing the amended application with the Department (Env-Wt 311.13).

☐ By checking this box, you confirm that you have provided all information required pursuant to Env-Wt 311.03 to the Department and provided the required notice(s) as described above.

SECTION 3 - AMENDMENT TO AN EXISTING PERMIT

☐ Not applicable

To request an amendment to an existing permit, the permittee must:

- Submit the information required and filed with the original permit application, including but not limited to a revised set of plans, and revised application fees for any additional square footage of impacts calculated pursuant to RSA 482-A:3, I(b) or (c) as applicable, and
- Provide notice to all who received notice of the original application prior to filing the amended application with the Department (Env-Wt 314.07).

☒ By checking this box, you confirm that you have provided all necessary information to the Department and provided the required notice(s) as described above.

van

The State of New Hampshire

Department of Environmental Services

Robert R. Scott, Commissioner

69

February 6, 2025

Her Excellency, Governor Kelly A. Ayotte
and The Honorable Council
State House
Concord, NH 03301

REQUESTED ACTION

Approve Scott C. Fuller Development LLC's request to perform the following work on Lake Winnipesaukee in Moultonborough pursuant to NH Department of Environmental Services (NHDES) Wetlands Bureau permit #2023-02686, and in accordance with RSA 482-A:3. Comments submitted by the Moultonborough Conservation Commission on the project as proposed, are addressed in the Findings and are included in the enclosed documents.

Impact 929 square feet of lake bed in order to construct a 63 foot long breakwater oriented diagonal to the shore, install a 4 foot x 49 foot cantilevered pier accessed by a 5 foot x 13 foot walkway and install a set of 5 foot x 9 foot stairs constructed over the bank on an average of 119 feet of frontage along the west point of Long Island on Lake Winnipesaukee in Moultonborough.

NHDES imposed the following conditions as part of this approval:

1. In accordance with Env-Wt 307.16, all work shall be done in accordance with the revised plans, revision dated December 3, 2023 by Scott Fuller, as received by the NH Department of Environmental Services (NHDES) on February 1, 2024.
2. This permit shall not be effective until it has been recorded in the Carroll County Registry of Deeds and a copy of the recorded permit has been provided to the department as required pursuant to RSA 482-A:3, and Env-Wt 314.02.
3. In accordance with Env-Wt 512.05(b), no rocks shall be stockpiled in any jurisdictional area.
4. Only those structures shown on the approved plans shall be installed or constructed along this frontage as required per Env-Wt 513.22, (a).
5. All portions of the docking structures, including the breakwater toe -of-slope, shall be located at least 20 feet from the abutting property lines and no watercraft shall be secured to the docking facility such that it crosses over the imaginary extension of the property lines over the surface water as required by RSA 482-A:3, XIII.
6. Owners of permanent docking structures which are not maintained so as to be structurally sound and usable for their intended purpose shall remove those docking structures in accordance with Env-Wt 513.22(c), to prevent hazards to public safety, navigation, and recreation.
7. The owner understands and accepts that should these docking structures be found to have an unreasonable impact on the ability of abutting owners to use and enjoy their properties or the public's right to navigation, passage, and use of the resource for commerce and recreation the structures shall be subject to removal pursuant to RSA 482-A:1, RSA 482-A:11, II, and Env-Wt 513.03(a).

8. Pursuant to RSA 483-B:9, V(a)(2)(D), (v), this permit does not authorize the removal of trees or saplings within the waterfront buffer that would result in a tree and sapling point score below the minimum required per RSA 483-B:9, V(a)(2)(D), (iv).
9. In accordance with Env-Wt 307.10(c), turbidity controls shall be installed prior to construction and maintained during construction such that no turbidity escapes the immediate dredge area; and remain in place until suspended particles have settled and water at the work site has returned to normal clarity.
10. Pursuant to RSA 482-A:14, RSA 482-A:14-b, and RSA 482-A:14-c, NHDES is authorized to take appropriate compliance actions should it be determined that, based upon additional information which becomes available, any of the structures depicted as "existing" on the plans submitted by or on behalf of the permittee were not previously permitted or grandfathered.

EXPLANATION

NHDES approved this project on November 25, 2024. NHDES supported its decision with the following findings:

1. This is a major impact project per Administrative Rule Env-Wt 512.06(a), construction of a breakwater.
2. The applicant has an average of 119 feet of frontage along Lake Winnipesaukee.
3. A maximum of 2 slips may be permitted on this frontage per Rule Env-Wt 513.12, Frontage Requirements for Private and Non-commercial Docking Structures.
4. The proposed docking facility will provide 2 slips as defined per RSA 482-A:2, VIII, and therefore meets Rule Env-Wt 513.12.
5. The NHDES finds that because the project is not of significant public interest and will not significantly impair the resources of Lake Winnipesaukee a public hearing under RSA 482-A:8 is not required.
6. No concerns were received from abutters related to the project.
7. The applicant and their agent have provided dated video recording of waves in conjunction with wind speed measurements which demonstrate that the site meets the criterion specified in Env-Wt 512.02(b)(2).
8. On October 4, 2023 the department received comments from the Moultonborough Conservation Commission (MCC) identifying potential issues with the dimensions of the proposed dock and breakwater.
9. The plans submitted with the application demonstrate that the proposed breakwater and cantilevered pier meet the approval criteria, including dimension limits, of Env-Wt 512.02 and Env-Wt 513.03.
10. The NHDES finds that the project as proposed and conditioned meets the requirements of RSA 482-A and the Wetlands Program Code of Administrative Rules Chapters Env-Wt 100 - 900. No waivers of RSA 482-A or the Wetlands Program Code of Administrative Rules Chapters Env-Wt 100 - 900 were requested or approved under this permit action.

NHDES Wetlands Bureau permit #2023-02686 application documents are enclosed for review by the Governor and the Executive Council in consideration of this request and in accordance with RSA 482-A:3, II(a), as it is a major project located in New Hampshire public waters.

Respectfully,

Robert R. Scott, Commissioner

STANDARD DREDGE AND FILL WETLANDS PERMIT APPLICATION

Water Division/Land Resources Management

Wetlands Bureau

Check the Status of your Application

RSA/Rule: RSA 482-A/Env-Wt 100-900

APPLICANT'S NAME: Scott C. Fuller Development LLC, Scott C. Fuller (manager) **TOWN NAME:** Moultonboro

RECEIVED Administrative Use Only OCT 02 2023 NHDES LAND RESOURCES MANAGEMENT	COMPLETE Administrative Use Only OCT 02 2023	Administrative Use Only	File No.: 2023-02686
			Check No.: 10511
			Amount: 5340-
			Initials:

A person may request a waiver of the requirements in Rules Env-Wt 100-900 to accommodate situations where strict adherence to the requirements would not be in the best interest of the public or the environment but is still in compliance with RSA 482-A. A person may also request a waiver of the standards for existing dwellings over water pursuant to RSA 482-A:26, III(b). For more information, please consult the Waiver Request Form.

SECTION 1 - REQUIRED PLANNING FOR ALL PROJECTS (Env-Wt 306.05; RSA 482-A:3, I(d)(2)) Please use the Wetland Permit Planning Tool (WPPT), the Natural Heritage Bureau (NHB) DataCheck Tool, the Aquatic Restoration Mapper, or other sources to assist in identifying key features such as: priority resource areas (PRAs), protected species or habitats, coastal areas, designated rivers, or designated prime wetlands.	
Has the required planning been completed?	☒ Yes ☐ No
Does the property contain a PRA? If yes, provide the following information:	☐ Yes ☒ No
• Does the project qualify for an Impact Classification Adjustment (e.g. NH Fish and Game Department (NHF&G) and NHB agreement for a classification downgrade) or a Project-Type Exception (e.g. Maintenance or Statutory Permit-by-Notification (SPN) project)? See Env-Wt 407.02 and Env-Wt 407.04.	☐ Yes ☒ No
• Protected species or habitat? o If yes, species or habitat name(s): o NHB Project ID #: 23-1088	☐ Yes ☒ No
• Bog?	☐ Yes ☒ No
• Floodplain wetland contiguous to a tier 3 or higher watercourse?	☐ Yes ☒ No
• Designated prime wetland or duly-established 100-foot buffer?	☐ Yes ☒ No
• Sand dune, tidal wetland, tidal water, or undeveloped tidal buffer zone?	☐ Yes ☒ No
Is the property within a Designated River corridor? If yes, provide the following information: • Name of Local River Management Advisory Committee (LAC): • A copy of the application was sent to the LAC on Month: Day: Year:	☐ Yes ☒ No
For dredging projects, is the subject property contaminated?	☐ Yes ☒ No

• If yes, list contaminant:	
Is there potential to impact impaired waters, class A waters, or outstanding resource waters?	☐ Yes ☒ No
For stream crossing projects, provide watershed size (see WPPT or Stream Stats): N/A	

SECTION 2 - PROJECT DESCRIPTION (Env-Wt 311.04(i))

Provide a **brief** description of the project and the purpose of the project, outlining the scope of work to be performed and whether impacts are temporary or permanent. DO NOT reply "See attached"; please use the space provided below.

Owner wishes to construct a rock breakwater for safe dockage and safe boarding of passengers. Breakwater will consist of 2 boat slips. This breakwater would be permanent.

SECTION 3 - PROJECT LOCATION

Separate wetland permit applications must be submitted for each municipality within which wetland impacts occur.

ADDRESS: 134 WEST POINT ROAD

TOWN/CITY: MOULTONBORO NH 03254

TAX MAP/BLOCK/LOT/UNIT: 272-46

US GEOLOGICAL SURVEY (USGS) TOPO MAP WATERBODY NAME: LAKE WINNIPESAUKEE
☐ N/A

(Optional) LATITUDE/LONGITUDE in decimal degrees (to five decimal places): ____ ° North
____ ° West

SECTION 4 - APPLICANT (DESIRED PERMIT HOLDER) INFORMATION (Env-Wt 311.04(a))

If the applicant is a trust or a company, then complete with the trust or company information.

NAME: SCOTT C. FULLER DEVELOPMENT LLC , SCOTT C. FULLER (manager)

MAILING ADDRESS: [redacted]		
TOWN/CITY: [redacted]	STATE: [redacted]	ZIP CODE: [redacted]
EMAIL ADDRESS: [redacted]		
FAX: [redacted]	PHONE: [redacted]	
ELECTRONIC COMMUNICATION: By initialing here: SF, I hereby authorize NHDES to communicate all matters relative to this application electronically.		
SECTION 5 - AUTHORIZED AGENT INFORMATION (Env-Wt 311.04(c)) ☐ N/A		
LAST NAME, FIRST NAME, M.I.: MCNAIR, WILLIAM		
COMPANY NAME:		
MAILING ADDRESS: 41 COVE ROAD		
TOWN/CITY: EAST WAKEFIELD	STATE: NH	ZIP CODE: 03830
EMAIL ADDRESS: mcnair2358@gmail.com		
FAX:	PHONE: 603-755-1497	
ELECTRONIC COMMUNICATION: By initialing here WM, I hereby authorize NHDES to communicate all matters relative to this application electronically.		
SECTION 6 - PROPERTY OWNER INFORMATION (IF DIFFERENT THAN APPLICANT) (Env-Wt 311.04(b)) If the owner is a trust or a company, then complete with the trust or company information. ☒ Same as applicant		
NAME:		
MAILING ADDRESS:		
TOWN/CITY:	STATE:	ZIP CODE:
EMAIL ADDRESS:		
FAX:	PHONE:	
ELECTRONIC COMMUNICATION: By initialing here, I hereby authorize NHDES to communicate all matters relative to this application electronically.		

SECTION 7 - RESOURCE-SPECIFIC CRITERIA ESTABLISHED IN Env-Wt 400, Env-Wt 500, Env-Wt 600, Env-Wt 700, OR Env-Wt 900 HAVE BEEN MET (Env-Wt 313.01(a)(3))

Describe how the resource-specific criteria have been met for each chapter listed above (please attach information about stream crossings, coastal resources, prime wetlands, or non-tidal wetlands and surface waters):

This Breakwater project has been located and designed to minimize impacts to the public waters and public interests and the natural resources of Lake Winnipesaukee according to Env-Wt 400 , Env-Wt 500 and Env-Wt 600

Env-Wt 700 is not applicable – No Prime Wetland in the vicinity of project

Env-Wt 800 is not applicable – No Mitigation is required for this project.

Env-Wt 900 is not applicable – No Stream Crossing will be required for this project.

SECTION 8 - AVOIDANCE AND MINIMIZATION

Impacts within wetland jurisdiction must be avoided to the maximum extent practicable (Env-Wt 313.03(a)).* Any project with unavoidable jurisdictional impacts must then be minimized as described in the Wetlands Best Management Practice Techniques For Avoidance and Minimization and the Wetlands Permitting: Avoidance, Minimization and Mitigation Fact Sheet. For minor or major projects, a functional assessment of all wetlands on the project site is required (Env-Wt 311.03(b)(10)).*

Please refer to the application checklist to ensure you have attached all documents related to avoidance and minimization, as well as functional assessment (where applicable). Use the Avoidance and Minimization Checklist, the Avoidance and Minimization Narrative, or your own avoidance and minimization narrative.

**See Env-Wt 311.03(b)(6) and Env-Wt 311.03(b)(10) for shoreline structure exemptions.*

SECTION 9 - MITIGATION REQUIREMENT (Env-Wt 311.02)

If unavoidable jurisdictional impacts require mitigation, a mitigation pre-application meeting must occur at least 30 days but not more than 90 days prior to submitting this Standard Dredge and Fill Permit Application.

Mitigation Pre-Application Meeting Date: Month: Day: Year:

(☒ N/A - Mitigation is not required)

SECTION 10 - THE PROJECT MEETS COMPENSATORY MITIGATION REQUIREMENTS (Env-Wt 313.01(a)(1)c)

Confirm that you have submitted a compensatory mitigation proposal that meets the requirements of Env-Wt 800 for all permanent unavoidable impacts that will remain after avoidance and minimization techniques have been exercised to the maximum extent practicable: ☐ I confirm submittal.

(☒ N/A – Compensatory mitigation is not required)

SECTION 11 - IMPACT AREA (Env-Wt 311.04(g))

For each jurisdictional area that will be/has been impacted, provide square feet (SF) and, if applicable, linear feet (LF) of impact, and note whether the impact is after-the-fact (ATF; i.e., work was started or completed without a permit).

For intermittent and ephemeral streams, the linear footage of impact is measured along the thread of the channel. *Please note, installation of a stream crossing in an ephemeral stream may be undertaken without a permit per Rule Env-Wt 309.02(d), however other dredge or fill impacts should be included below.*

For perennial streams/rivers, the linear footage of impact is calculated by summing the lengths of disturbances to the channel and banks.

Permanent impacts are impacts that will remain after the project is complete (e.g., changes in grade or surface materials).

Temporary impacts are impacts not intended to remain (and will be restored to pre-construction conditions) after the project is completed.

JURISDICTIONAL AREA		PERMANENT			TEMPORARY		
		SF	LF	ATF	SF	LF	ATF
Wetlands	Forested Wetland			☐			☐
	Scrub-shrub Wetland			☐			☐
	Emergent Wetland			☐			☐
	Wet Meadow			☐			☐
	Vernal Pool			☐			☐
	Designated Prime Wetland			☐			☐
	Duly-established 100-foot Prime Wetland Buffer			☐			☐
Surface	Intermittent / Ephemeral Stream			☐			☐
	Perennial Stream or River			☐			☐
	Lake / Pond			☐			☐
	Docking - Lake / Pond	1190	64	☐			☐
	Docking - River			☐			☐
Banks	Bank - Intermittent Stream			☐			☐
	Bank - Perennial Stream / River			☐			☐
	Bank / Shoreline - Lake / Pond	stairs 45	9	☐			☐
Tidal	Tidal Waters			☐			☐
	Tidal Marsh			☐			☐
	Sand Dune			☐			☐
	Undeveloped Tidal Buffer Zone (TBZ)			☐			☐
	Previously-developed TBZ			☐			☐
	Docking - Tidal Water			☐			☐
TOTAL		1235	73				

SECTION 12 - APPLICATION FEE (RSA 482-A:3, I)

☐ **MINIMUM IMPACT FEE:** Flat fee of $400.

☐ **NON-ENFORCEMENT RELATED, PUBLICLY-FUNDED AND SUPERVISED RESTORATION PROJECTS, REGARDLESS OF IMPACT CLASSIFICATION:** Flat fee of $400 (refer to RSA 482-A:3, 1(c) for restrictions).

☒ **MINOR OR MAJOR IMPACT FEE:** Calculate using the table below:

Permanent and temporary (non-docking):	SF	× $0.40 =	$
Seasonal docking structure:	SF	× $2.00 =	$
Permanent docking structure:	1235 SF	× $4.00 =	$ 4940
Projects proposing shoreline structures (including docks) add $400 =			$ 400
		Total =	$

The application fee for minor or major impact is the above calculated total or $400, whichever is greater = $ 5340

SECTION 13 - PROJECT CLASSIFICATION (Env-Wt 306.05)

Indicate the project classification.

☐ Minimum Impact Project	☐ Minor Project	☒ Major Project

SECTION 14 - REQUIRED CERTIFICATIONS (Env-Wt 311.11)

Initial each box below to certify:

Initials: WM WM WM	To the best of the signer's knowledge and belief, all required notifications have been provided.
Initials: WM WM WM	The information submitted on or with the application is true, complete, and not misleading to the best of the signer's knowledge and belief.
Initials: WM WM WM	The signer understands that: • The submission of false, incomplete, or misleading information constitutes grounds for NHDES to: 1. Deny the application. 2. Revoke any approval that is granted based on the information. 3. If the signer is a certified wetland scientist, licensed surveyor, or professional engineer licensed to practice in New Hampshire, refer the matter to the joint board of licensure and certification established by RSA 310-A:1. • The signer is subject to the penalties specified in New Hampshire law for falsification in official matters, currently RSA 641. • The signature shall constitute authorization for the municipal conservation commission and the Department to inspect the site of the proposed project, except for minimum impact forestry SPN projects and minimum impact trail projects, where the signature shall authorize only the Department to inspect the site pursuant to RSA 482-A:6, II.
Initials: WM WM WM	If the applicant is not the owner of the property, each property owner signature shall constitute certification by the signer that he or she is aware of the application being filed and does not object to the filing.

SECTION 15 - REQUIRED SIGNATURES (Env-Wt 311.04(d); Env-Wt 311.11)

SIGNATURE (OWNER):	PRINT NAME LEGIBLY:	DATE:
	SCOTT C. FULLER (manager)	9/27/23
SIGNATURE (APPLICANT, IF DIFFERENT FROM OWNER):	PRINT NAME LEGIBLY:	DATE:
SIGNATURE (AGENT, IF APPLICABLE):	PRINT NAME LEGIBLY:	DATE:
	WILLIAM MCNAIR	9-27-23

SECTION 16 - TOWN / CITY CLERK SIGNATURE (Env-Wt 311.04(f))

As required by RSA 482-A:3, I(a)(1), I hereby certify that the applicant has filed four application forms, four detailed plans, and four USGS location maps with the town/city indicated below.

TOWN/CITY CLERK SIGNATURE:	PRINT NAME LEGIBLY:
	Alana Gilson
TOWN/CITY: Moultonborough	DATE: 9/27/2023

DIRECTIONS FOR TOWN/CITY CLERK:
Per RSA 482-A:3, I(a)(1)

1. IMMEDIATELY sign the original application form and four copies in the signature space provided above.
2. Return the signed original application form and attachments to the applicant so that the applicant may submit the application form and attachments to NHDES by mail or hand delivery.
3. IMMEDIATELY distribute a copy of the application with one complete set of attachments to each of the following bodies: the municipal Conservation Commission, the local governing body (Board of Selectmen or Town/City Council), and the Planning Board.
4. Retain one copy of the application form and one complete set of attachments and make them reasonably accessible for public review.

DIRECTIONS FOR APPLICANT:
Submit the original permit application form bearing the signature of the Town/City Clerk, additional materials, and the application fee to NHDES by mail or hand delivery at the address at the bottom of this page. Make check or money order payable to "Treasurer – State of NH".

134 West Pt Rd

Moultonborough, NH

April 6, 2023

1 inch = 100 Feet

0 100 200 300

CAI Technologies
Precision Mapping. Geospatial Solutions
www.cai-tech.com

PROPERTYLINE	Buildings
PVTRD	Right of Ways
PWATER	Water-poly
PVTRD-RW	

RECEIVED
OCT 02 2023
NHDES
LAND RESOURCES MANAGEMENT

Data shown on this map is provided for planning and informational purposes only. The municipality and CAI Technologies are not responsible for any use for other purposes or misuse or misrepresentation of this map.

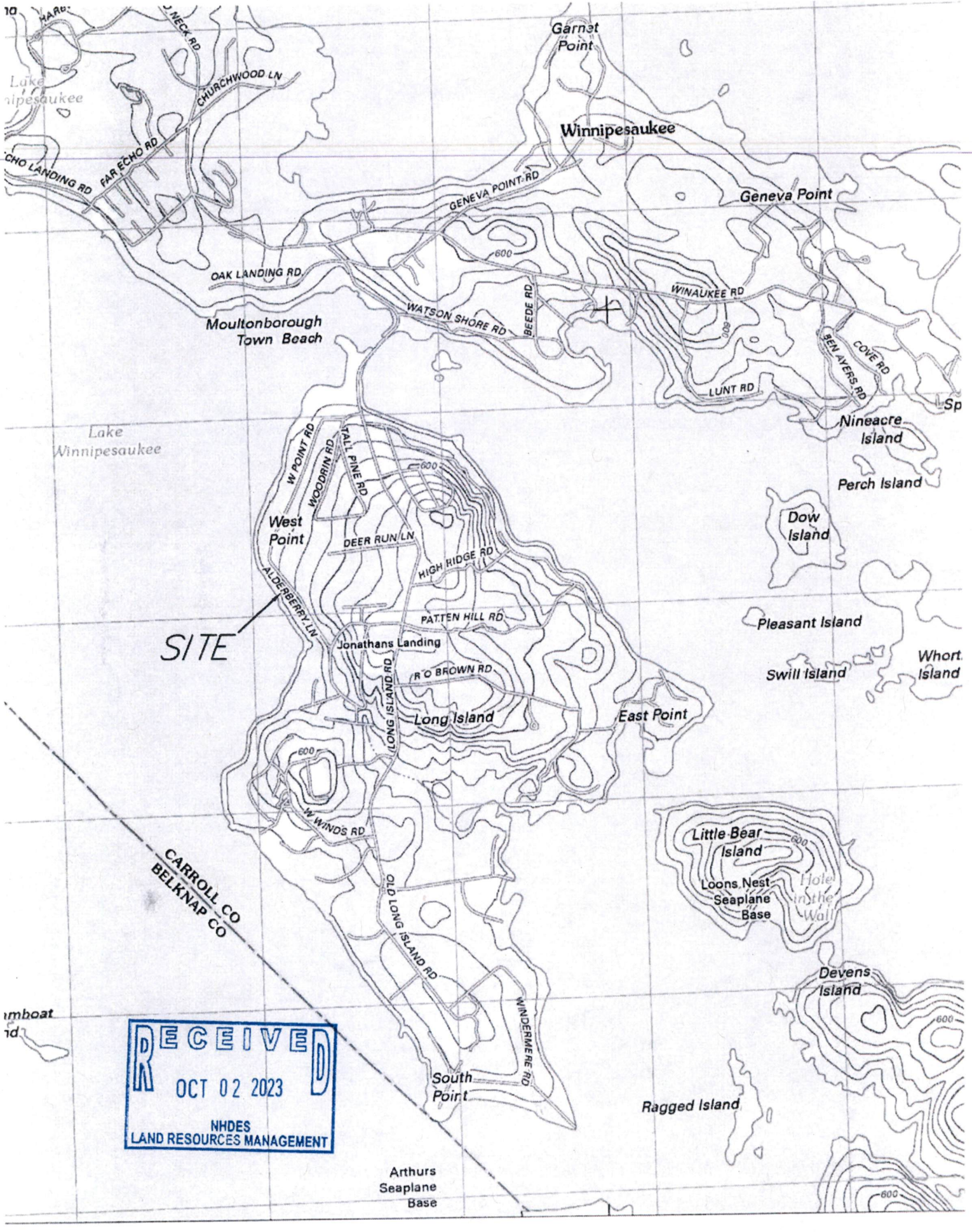

RECEIVED
OCT 02 2023
NHDES
LAND RESOURCES MANAGEMENT

New Hampshire Natural Heritage Bureau
NHB DataCheck Results Letter

To: B MCNAIR
PO BOX 715
SANBORNVILLE, NH 03872

From: NH Natural Heritage Bureau

Date: 4/8/2023 (This letter is valid through 4/8/2024)

Re: Review by NH Natural Heritage Bureau of request dated 4/8/2023

Permit Types: Wetland Standard Dredge & Fill - Major
General Permit

NHB ID: NHB23-1088

Applicant: B MCNAIR

Location: Moultonborough
Tax Map: 272, Tax Lot: 46
Address: 134 west point road

Proj. Description: Owner wishes to build a 2 boat slip breakwater for the safe boarding of passengers and
dockage or boats.

The NH Natural Heritage database has been checked for records of rare species and exemplary natural communities near the area mapped below. The species considered include those listed as Threatened or Endangered by either the state of New Hampshire or the federal government. We currently have no recorded occurrences for sensitive species near this project area.

A negative result (no record in our database) does not mean that a sensitive species is not present. Our data can only tell you of known occurrences, based on information gathered by qualified biologists and reported to our office. However, many areas have never been surveyed, or have only been surveyed for certain species. An on-site survey would provide better information on what species and communities are indeed present.

Based on the information submitted, no further consultation with the NH Fish and Game Department pursuant to Fis 1004 is required.

RECEIVED
OCT 02 2023
NHDES
LAND RESOURCES MANAGEMENT

Department of Natural and Cultural Resources
Division of Forests and Lands
(603) 271-2214 fax: 271-6488

DNCR/NHB
172 Pembroke Rd.
Concord NH 03301

MAP OF PROJECT BOUNDARIES FOR: NHB23-1088

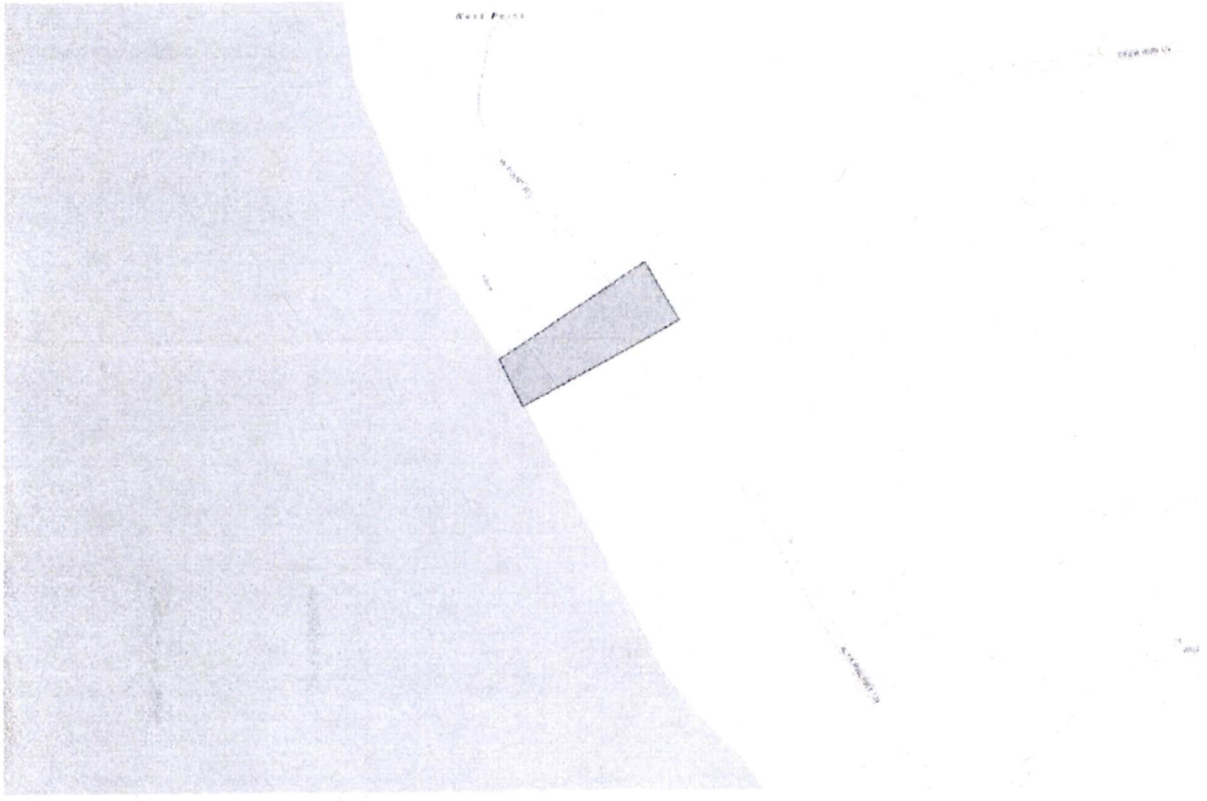

MOULTONBOROUGH CONSERVATION COMMISSION
MOULTONBOROUGH, NEW HAMPSHIRE 03254
COMMENT SHEET

Application Date 10/4/2023 **Map No.** 272 **Lot No.** 046

Report to the Wetlands Board from the Moultonborough Conservation Commission regarding the Standard Dredge & Fill Wetlands Permit Application, Expedited Permit Application or Permit by Notification Application of:

Name Scott Fuller

Mailing Address [redacted]

Location of Property 134 West Point Road

Type of Project Standard Dredge & Fill: Major Project – Construct a breakwater and dock

___ *We have no objections to the issuance of this permit.*

___ *Please suspend action on this application pursuant to RSA 483-A:4-a IV, so we may investigate this project.*

__X__ *We have investigated this application and would like to make the following recommendations:*

The Conservation Commission recommends that more data be included in the application before it is approved. It does not include information about the radial fetch nor documentation about wave height.

In addition, before the application is approved the following should be addressed:

- The dock is listed as 8 feet wide, when 6 feet is listed in regulations. I was unable to find any reasoning for the additional 2 feet of width. The Commission recommends the dock be 6 feet wide.
- The plan for the breakwater includes dimensions that are outside the 50 foot regulation from shore. The plan may need to be redone.
- As the end of the breakwater is adjacent to the 20 foot buffer of the property line, perhaps it should be shortened as work on the structure will be within the buffer.

State File No
Signature: Marie Samaha, Moultonborough Con. Comm Date: October 4, 2023

100 foot Abutters List Report

Moultonborough, NH
April 07, 2023

Subject Property:

Parcel Number: 272046000
CAMA Number: 272046000000000
Property Address: 134 WEST POINT ROAD

Mailing Address: SCOTT C FULLER DEVELOPMENT LLC
C/O SCOTT FULLER - MGR
[redacted]

Abutters:

Parcel Number: 272007000
CAMA Number: 272007000000000
Property Address: 35 ALDERBERRY LANE

Mailing Address: BEYER ERIC J & JULIE
[redacted]

Parcel Number: 272008000
CAMA Number: 272008000000000
Property Address: 28 ALDERBERRY LANE

Mailing Address: SINISCALCHI MJ & CB 2012 REV T
SINISCALCHI MJ & CB TRUSTEES
[redacted]

Parcel Number: 272012000
CAMA Number: 272012000000000
Property Address: 30 HOLLY TRAIL

Mailing Address: GREEN C RUSSELL & PAMELA M
[redacted]

Parcel Number: 272020000
CAMA Number: 272020000000000
Property Address: LONG ISLAND ROAD

Mailing Address: WALKER COURTNEY J TRUST WALKER
COURTNEY J - TRUSTEE
[redacted]

Parcel Number: 272047000
CAMA Number: 272047000000000
Property Address: 132 WEST POINT ROAD

Mailing Address: LASS KERRY TRUST WALSH THOMAS D
& KEVIN M
[redacted]

Parcel Number: 272048000
CAMA Number: 272048000000000
Property Address: 130 WEST POINT ROAD

Mailing Address: SPENCER WILLIAM B 2007 REV TRU
SPENCER WILLIAM B - TRUSTEE
[redacted]

RECEIVED
OCT 02 2023
NHDES
LAND RESOURCES MANAGEMENT

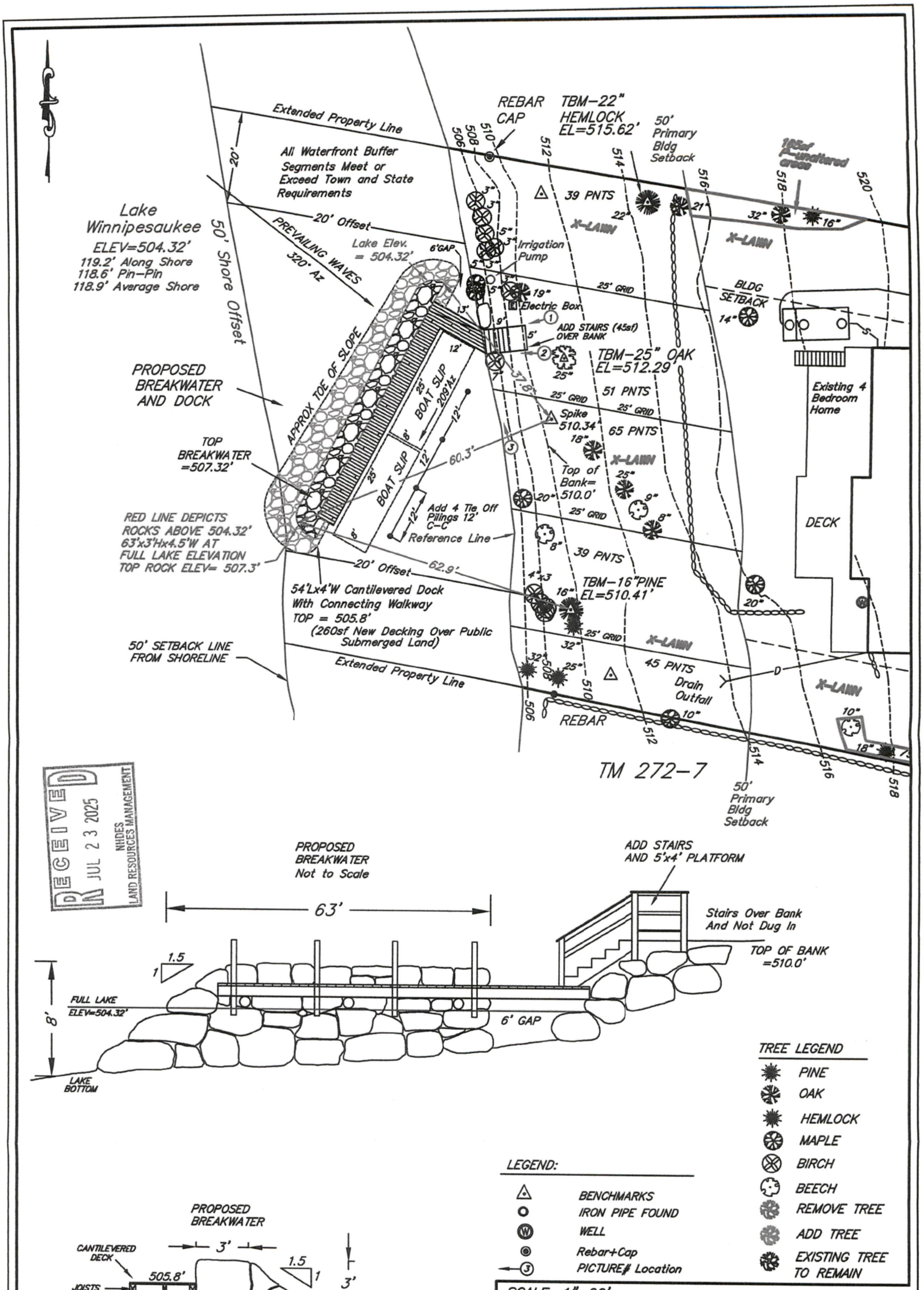

RECEIVED
JUL 23 2025
NHDES
LAND RESOURCES MANAGEMENT

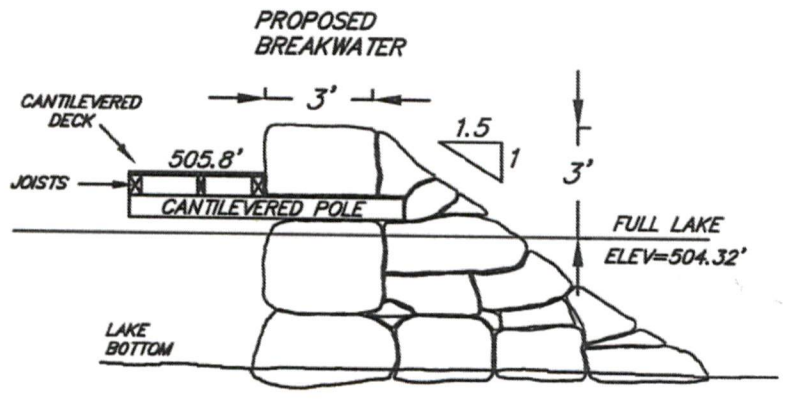

BREAKWATER PROFILE
NOT TO SCALE

TREE LEGEND
- PINE
- OAK
- HEMLOCK
- MAPLE
- BIRCH
- BEECH
- REMOVE TREE
- ADD TREE
- EXISTING TREE TO REMAIN

LEGEND:
- BENCHMARKS
- IRON PIPE FOUND
- WELL
- Rebar+Cap
- PICTURE# Location

SCALE: 1"=20'

PLAN FOR A
PROPOSED BREAKWATER AND DOCK
134 WEST POINT ROAD, MOULTONBORO
Tax Map 272 Lot 46
FOR
OWNER: **Scott C. Fuller Development LLC**
Scott C. Fuller (manager)
[redacted]

9/7/2023
7/8/2025 Amended to add 4 tie off pilings