152 mac

State of New Hampshire

DEPARTMENT OF ADMINISTRATIVE SERVICES
25 Capitol Street
Concord, New Hampshire 03301
(603) 271-3201 | Office@das.nh.gov

Charles M. Arlinghaus
Commissioner

Catherine A. Keane
Deputy Commissioner

Sheri L. Rockburn
Assistant Commissioner

November 13, 2024

His Excellency, Governor Christopher T. Sununu
and the Honorable Council
State House
Concord, New Hampshire 03301

REQUESTED ACTION

Authorize the Department of Administrative Services to enter into to a new contract with 3M Company (VC#177728), Murray, UT, for Retroreflective and Non-reflective Sheeting in an amount of up to and not to exceed $411,972.00, with the option to renew for up to an additional two years effective upon the Governor and Executive Council's approval through October 31, 2027.

Funding shall be provided through individual agency expenditures, none of which shall be permitted unless there are sufficient appropriated funds to cover the expenditure.

EXPLANATION

Retroreflective sheeting is a flexible material primarily used to increase the nighttime conspicuity of traffic signs, high-visibility clothing, and other items. It redirects light from an approaching vehicle's headlamps back to the source. These products ensure the safety of all drivers and pedestrians living in and visiting the State of New Hampshire.

The Department of Administrative Services, through the Bureau of Purchase and Property, issued request for bid (RFB) 2954-25 for retroreflective and non-reflective sheeting for statewide contract usage on August 20, 2024, with responses due on September 9, 2024. The RFB reached 21 vendors through the NIGP registry with an additional 9 directly sourced. There were three compliant responses for all four sections received, with the lowest being from 3M Company for section one.

It is the State's intent to award sections one and three of this bid (RFB 2954-25) as statewide contracts. Section three of this contract will be awarded to Avery Dennison Corporation upon approval. No bids were received for section two and due to the low annual use of section four, State agencies will be able to utilize their P-Card for the small amount transactions as required.

The requested price limitation of $411,972.00 is reflective of actual expenditures through business intelligence reports from the last three years and includes a 10% allowance for items

purchased under the contractor's balance of product line. This contract also reflects a 13% overall cost increase for comparable items as shown in 3M Company's bid response when compared to expiring contract (Contract #8002940) pricing. This is supported by statistics from the Plastic and Resins Industry showing increases of $0.03 per pound annually over the last three years and 4.2% labor costs increased shown in the U.S. Labor and Statistics overview.

Contract financials	
Estimated annual spend	$124,840.00
Estimated 3-year term spend	$374,520.00
Add balance of product line	$37,452.00
Requested price limitation	$411,972.00

Based on the foregoing, I am respectfully requesting approval of the contract with 3M Company.

Respectfully submitted,

Charles M. Arlinghaus
Commissioner

Division of Procurement Support Services
Bureau of Purchase Property

Gary S. Lunetta
Director
(603) 271-2201

RFB Bid Summary

Bid Description	Retroreflective and Non-reflective Sheeting	Agency	Statewide
RFB#	2954-25	Requisition#	N/A
Agent Name	James Poulin	Bid Closing	9/9/2024

Indicates Award: ☐

Qty	UOM	Product Description	3M		Avery Dennison Corporation		American Traffic Safety Materials Inc.		Expiring Contract	
			Unit Cost	Extended Cost	Unit Cost	Extended Cost	Unit Cost	Extended Cost	Unit Cost	Extended Cost
Section 1 - Traffic Sign Retroreflective Sheeting & Associated Materials										
8,000	Sq. FT	Item 1A (Pressure Sensitive (All Traffic Colors)	$0.90	$7,200.00	$0.95	$7,600.00	Non-Compliant		$0.75	$6,000.00
40,000	Sq. FT	Item 1B Total (Pressure Sensitve (All Traffic Colors)	$0.98	$39,200.00	$1.00	$40,000.00	Non-Compliant		$0.73	$29,200.00
8,000	Sq. FT	Item 1C (All Standard Colors (Except Fluorescent)	$1.72	$13,760.00	$1.55	$12,400.00	Non-Compliant		$1.75	$14,000.00
2,500	Sq. FT	Item 1C (Flourescent Orange)	$1.72	$4,300.00	$1.55	$3,875.00	Non-Compliant		$1.50	$3,750.00
6,000	Sq. FT	Item 1C (Flourescent Yellow)	$1.72	$10,320.00	$1.55	$9,300.00	Non-Compliant		$1.50	$9,000.00
3,000	Sq. FT	Item 1C (Flourescent Yellow-Green)	$1.72	$5,160.00	$1.55	$4,650.00	Non-Compliant		$1.50	$4,500.00
2,500	Sq. FT	Item 1D (All Standard Colors (Except Fluorescent)	$1.72	$4,300.00	$1.85	$4,625.00	Non-Compliant		$1.75	$4,375.00
1,500	Sq. FT	Item 1D (Flourescent Orange)	$1.72	$2,580.00	$1.85	$2,775.00	Non-Compliant		$1.75	$2,625.00
1,500	Sq. FT	Item 1D (Flourescent Yellow)	$1.72	$2,580.00	$1.85	$2,775.00	Non-Compliant		$1.75	$2,625.00
1,500	Sq. FT	Item 1D (Flourescent Yellow-Green)	$1.72	$2,580.00	$1.85	$2,775.00	Non-Compliant		$1.75	$2,625.00
2,000	Sq. FT	Item 1E (All Standard Colors (Except Fluorescent)	$1.72	$3,440.00	$1.85	$3,700.00	Non-Compliant		$1.75	$3,500.00
2,000	Sq. FT	Item 1E (Flourescent Orange)	$1.72	$3,440.00	$1.85	$3,700.00	Non-Compliant		$1.75	$3,500.00
2,000	Sq. FT	Item 1E (Flourescent Yellow)	$1.72	$3,440.00	$1.85	$3,700.00	Non-Compliant		$1.75	$3,500.00
2,000	Sq. FT	Item 1E (Flourescent Yellow-Green)	$1.72	$3,440.00	$1.85	$3,700.00	Non-Compliant		$1.75	$3,500.00
2,000	Sq. FT	Item 1F (Overlay Film (3M Series 1170 or Equivalent) Clear)	$0.77	$1,540.00	$0.90	$1,800.00	Non-Compliant		$0.66	$1,320.00
20,000	Sq. FT	Item 1F (Overlay Film (3M Series 1170 or Equivalent) Colors)	$0.80	$16,000.00	$0.92	$18,400.00	Non-Compliant		$0.66	$13,200.00
1,200	Sq. FT	Premium Anti-Graffiti Film (3M Series 1160 or Equivalent)	$1.30	$1,560.00	$1.15	$1,380.00	Non-Compliant		$1.05	$1,260.00
		Section 1 Subtotal		**$124,840.00**		**$127,155.00**				**$108,480.00**
Section 2 - Vehicle Marking Sheeting & Associated Materials										
800	Sq. FT	Item 2A (Removable - White)	No Bid		No Bid		No Bid		$3.46	$2,768.00
1,500	Sq. FT	Item 2A (Removable - Color)	No Bid		No Bid		No Bid		$3.46	$5,190.00
800	Sq. FT	Item 2A (Non-removable - White)	No Bid		No Bid		No Bid		$3.22	$2,576.00
1,200	Sq. FT	Item 2A (Non-removable - Color)	No Bid		No Bid		No Bid		$3.22	$3,864.00
500	Sq. FT	Item 2B (Rigid - White)	No Bid		No Bid		No Bid		$2.60	$1,300.00
1,500	Sq. FT	Item 2B (Rigid - All Standard Colors)	No Bid		No Bid		No Bid		$2.60	$3,900.00
500	Sq. FT	Item 2B (Flexible - White)	No Bid		No Bid		No Bid		$2.00	$1,000.00
800	Sq. FT	Item 2B (Flexible - All Standard Colors)	No Bid		No Bid		No Bid		$2.00	$1,600.00
		Section 2 Subtotal		**$0.00**		**$0.00**				**$22,198.00**
Section 3 - Non-reflective & Retroreflective Plastic & Vinyl Film										
15	RO	Item 3A (12" x 50 Yards)	No Bid		$172.50	$2,587.50	No Bid		N/A	$0.00
20	RO	Item 3A 15" x 50 Yards	No Bid		$230.00	$4,600.00	No Bid		N/A	$0.00
30	RO	Item 3A (24" x 50 Yards)	No Bid		$345.00	$10,350.00	No Bid		N/A	$0.00
30	RO	Item 3A (30" x 50 Yards)	No Bid		$460.00	$13,800.00	No Bid		N/A	$0.00

Gary S. Lunetta
Director
(603) 271-2201

35	RO	Item 3A (36" x 50 Yards)	No Bid		$517.50	$18,112.50	No Bid		N/A	$0.00
40	RO	Item 3A (48" x 50 Yards)	No Bid		$690.00	$27,600.00	No Bid		N/A	$0.00
15	RO	Item 3B (12" x 50 Yards)	No Bid		$172.50	$2,587.50	No Bid		N/A	$0.00
20	RO	Item 3B (15" x 50 Yards)	No Bid		$230.00	$4,600.00	No Bid		N/A	$0.00
30	RO	Item 3B (24" x 50 Yards)	No Bid		$345.00	$10,350.00	No Bid		N/A	$0.00
30	RO	Item 3B (30" x 50 Yards)	No Bid		$460.00	$13,800.00	No Bid		N/A	$0.00
35	RO	Item 3B (36" x 50 Yards)	No Bid		$517.50	$18,112.50	No Bid		N/A	$0.00
40	RO	Item 3B (48" x 50 Yards)	No Bid		$690.00	$27,600.00	No Bid		N/A	$0.00
		Section 3 Subtotal		**$0.00**		**$154,100.00**				**$0.00**
		Section 4 - Transfer Film/Tape								
12	RO	Item 4A (24" x 100 Yards)	No Bid		No Bid		$84.00	$1,008.00	N/A	$0.00
6	RO	Item 4A (30" x 100 Yards)	No Bid		No Bid		$105.00	$630.00	N/A	$0.00
8	RO	Item 4A (36" x 100 Yards)	No Bid		No Bid		$116.00	$928.00	N/A	$0.00
3	RO	Item 4A (48" x 100 Yards)	No Bid		No Bid		$165.00	$495.00	N/A	$0.00
		Section 4 Subtotal		**$0.00**		**$0.00**				**$0.00**
		Sub Total		**$124,840.00**		**$281,255.00**		**$3,061.00**		**$130,678.00**

Recommendation Summary	
Statewide Contract or Amendment.	Contract.
Term of Contract	3 Years
Price Limitation	$411,972.00
Number of Solicitations Received	3
Number of Sourced bidders	9
Number of NIGP Vendors Sourced	21
Number of non-responsive bidders	27
P-37 Checklist Complete	Yes
D&B Report Attached	No
Method of Payment (P-card/ACH)	P-Card and ACH
FOB Delivered	Yes
Expiring Contract Price Limitation	$330,000.00

Special Notes: Expiring contract is non comparible to this bid summary. Expiring contract only offers sections 1 and 2 whereas this multi-award contract offers sections 1, 3 and 4. When comparing section 1 there is a 13% increase from the low bidder.

Bid Description	Retroreflective and Non-reflective Sheeting	Agency	Statewide
RFB#	2954-25	Requisition#	N/A
Agent Name	James Poulin	Bid Closing	9/9/2024

Indicates Award: ☐

Qty	UOM	Product Description	3M		Expiring Contract	
			Unit Cost	Extended Cost	Unit Cost	Extended Cost
		Section 1 - Traffic Sign Retroreflective Sheeting & Associated Materials				
8,000	Sq. FT	Item 1A (Pressure Sensitive (All Traffic Colors)	$0.90	$7,200.00	$0.75	$6,000.00
40,000	Sq. FT	Item 1B Total (Pressure Sensitve (All Traffic Colors)	$0.98	$39,200.00	$0.73	$29,200.00
8,000	Sq. FT	Item 1C (All Standard Colors (Except Fluorescent)	$1.72	$13,760.00	$1.75	$14,000.00
2,500	Sq. FT	Item 1C (Flourescent Orange)	$1.72	$4,300.00	$1.50	$3,750.00
6,000	Sq. FT	Item 1C (Flourescent Yellow)	$1.72	$10,320.00	$1.50	$9,000.00
3,000	Sq. FT	Item 1C (Flourescent Yellow-Green)	$1.72	$5,160.00	$1.50	$4,500.00
2,500	Sq. FT	Item 1D (All Standard Colors (Except Fluorescent)	$1.72	$4,300.00	$1.75	$4,375.00
1,500	Sq. FT	Item 1D (Flourescent Orange)	$1.72	$2,580.00	$1.75	$2,625.00
1,500	Sq. FT	Item 1D (Flourescent Yellow)	$1.72	$2,580.00	$1.75	$2,625.00
1,500	Sq. FT	Item 1D (Flourescent Yellow-Green)	$1.72	$2,580.00	$1.75	$2,625.00
2,000	Sq. FT	Item 1E (All Standard Colors (Except Fluorescent)	$1.72	$3,440.00	$1.75	$3,500.00
2,000	Sq. FT	Item 1E (Flourescent Orange)	$1.72	$3,440.00	$1.75	$3,500.00
2,000	Sq. FT	Item 1E (Flourescent Yellow)	$1.72	$3,440.00	$1.75	$3,500.00
2,000	Sq. FT	Item 1E (Flourescent Yellow-Green)	$1.72	$3,440.00	$1.75	$3,500.00
2,000	Sq. FT	Item 1F (Overlay Film (3M Series 1170 or Equivalent) Clear)	$0.77	$1,540.00	$0.66	$1,320.00
20,000	Sq. FT	Item 1F (Overlay Film (3M Series 1170 or Equivalent) Colors)	$0.80	$16,000.00	$0.66	$13,200.00
1,200	Sq. FT	Premium Anti-Graffiti Film (3M Series 1160 or Equivalent) Clear	$1.30	$1,560.00	$1.05	$1,260.00
		Section 1 Subtotal		**$124,840.00**		**$108,480.00**
		Section 2 - Vehicle Marking Sheeting & Associated Materials				
800	Sq. FT	Item 2A (Removable - White)	No Bid		$3.46	$2,768.00
1,500	Sq. FT	Item 2A (Removable - Color)	No Bid		$3.46	$5,190.00
800	Sq. FT	Item 2A (Non-removable - White)	No Bid		$3.22	$2,576.00
1,200	Sq. FT	Item 2A (Non-removable - Color)	No Bid		$3.22	$3,864.00
500	Sq. FT	Item 2B (Rigid - White)	No Bid		$2.60	$1,300.00
1,500	Sq. FT	Item 2B (Rigid - All Standard Colors)	No Bid		$2.60	$3,900.00
500	Sq. FT	Item 2B (Flexible - White)	No Bid		$2.00	$1,000.00
800	Sq. FT	Item 2B (Flexible - All Standard Colors)	No Bid		$2.00	$1,600.00
		Section 2 Subtotal		**$0.00**		**$22,198.00**
		Section 3 - Non-reflective & Retroreflective Plastic & Vinyl Film				
15	RO	Item 3A (12" x 50 Yards)	No Bid		N/A	$0.00
20	RO	Item 3A 15" x 50 Yards	No Bid		N/A	$0.00
30	RO	Item 3A (24" x 50 Yards)	No Bid		N/A	$0.00
30	RO	Item 3A (30" x 50 Yards)	No Bid		N/A	$0.00
35	RO	Item 3A (36" x 50 Yards)	No Bid		N/A	$0.00
40	RO	Item 3A (48" x 50 Yards)	No Bid		N/A	$0.00
15	RO	Item 3B (12" x 50 Yards)	No Bid		N/A	$0.00
20	RO	Item 3B (15" x 50 Yards)	No Bid		N/A	$0.00
30	RO	Item 3B (24" x 50 Yards)	No Bid		N/A	$0.00
30	RO	Item 3B (30" x 50 Yards)	No Bid		N/A	$0.00
35	RO	Item 3B (36" x 50 Yards)	No Bid		N/A	$0.00
40	RO	Item 3B (48" x 50 Yards)	No Bid		N/A	$0.00
		Section 3 Subtotal		**$0.00**		**$0.00**
		Section 4 - Transfer Film/Tape				
12	RO	Item 4A (24" x 100 Yards)	No Bid		N/A	$0.00
6	RO	Item 4A (30" x 100 Yards)	No Bid		N/A	$0.00
8	RO	Item 4A (36" x 100 Yards)	No Bid		N/A	$0.00
3	RO	Item 4A (48" x 100 Yards)	No Bid		N/A	$0.00
		Section 4 Subtotal		**$0.00**		**$0.00**
		Sub Total		**$124,840.00**		**$130,678.00**

Estimated annual spend	$124,840.00	**Expiring contract annual**	$108,480.00
Estimated term spend	$374,520.00	**Expiring contract term**	$325,440.00
Add allowance for balance of product line	$37,452.00	**Cost increase/Savings X% or**	$16,360.00
Recommended price limitation	$411,972.00	**Delta: new vs. expiring**	13%

Recommendation Summary			
Statewide Contract or Amendment	Contract		
Term of Contract	3 Years		
Price Limitation	$411,972.00		
Number of Solicitations Received	3		
Number of Sourced bidders	9		
Number of NIGP Vendors Sourced	21		
Number of non-responsive bidders	27		
P-37 Checklist Complete	Yes		
D&B Report Attached	No		
Method of Payment (P-card/ACH)	P-Card and ACH		
FOB Delivered	Yes		
Expiring Contract Price Limitation	$330,000.00		
Total Cost Savings ($/%)	$16,360.00	13%	Increase

Special Notes: For contract cross comparision, only section 1 can be compared to expiring contract. This is a multi vendor award.

Notice: This agreement and all of its attachments shall become public upon submission to Governor and Executive Council for approval. Any information that is private, confidential or proprietary must be clearly identified to the agency and agreed to in writing prior to signing the contract.

AGREEMENT

The State of New Hampshire and the Contractor hereby mutually agree as follows:

GENERAL PROVISIONS

1. IDENTIFICATION.

1.1 State Agency Name Department of Administrative Services Bureau of Purchase and Property		1.2 State Agency Address 25 Capitol Street Concord, NH 03301	
1.3 Contractor Name 3M Company		1.4 Contractor Address 3M Center, 223-3W-33 St. Paul, MN 55144-1000	
1.5 Contractor Phone Number 651-381-2837	1.6 Account Unit and Class Various	1.7 Completion Date October 31, 2027	1.8 Price Limitation $411,972.00
1.9 Contracting Officer for State Agency Gary Lunetta, Director		1.10 State Agency Telephone Number 603-271-3606	
1.11 Contractor Signature Date: 10/10/2024		1.12 Name and Title of Contractor Signatory Maria Paraschou, Sr. Proposal & Contract Manager	
1.13 State Agency Signature Date: 10/23/24		1.14 Name and Title of State Agency Signatory Charles M. Arlinghaus, Commissioner	
1.15 Approval by the N.H. Department of Administration, Division of Personnel *(if applicable)* By:		Director, On:	
1.16 Approval by the Attorney General (Form, Substance and Execution) *(if applicable)* By: Duncan A. Edgar		On: November 21, 2024	
1.17 Approval by the Governor and Executive Council *(if applicable)* G&C Item number:		G&C Meeting Date:	

Contractor Initials MP

Date 10/9/2024

2. SERVICES TO BE PERFORMED. The State of New Hampshire, acting through the agency identified in block 1.1 ("State"), engages contractor identified in block 1.3 ("Contractor") to perform, and the Contractor shall perform, the work or sale of goods, or both, identified and more particularly described in the attached EXHIBIT B which is incorporated herein by reference ("Services").

3. EFFECTIVE DATE/COMPLETION OF SERVICES.

3.1 Notwithstanding any provision of this Agreement to the contrary, and subject to the approval of the Governor and Executive Council of the State of New Hampshire, if applicable, this Agreement, and all obligations of the parties hereunder, shall become effective on the date the Governor and Executive Council approve this Agreement, unless no such approval is required, in which case the Agreement shall become effective on the date the Agreement is signed by the State Agency as shown in block 1.13 ("Effective Date").

3.2 If the Contractor commences the Services prior to the Effective Date, all Services performed by the Contractor prior to the Effective Date shall be performed at the sole risk of the Contractor, and in the event that this Agreement does not become effective, the State shall have no liability to the Contractor, including without limitation, any obligation to pay the Contractor for any costs incurred or Services performed.

3.3 Contractor must complete all Services by the Completion Date specified in block 1.7.

4. CONDITIONAL NATURE OF AGREEMENT.

Notwithstanding any provision of this Agreement to the contrary, all obligations of the State hereunder, including, without limitation, the continuance of payments hereunder, are contingent upon the availability and continued appropriation of funds. In no event shall the State be liable for any payments hereunder in excess of such available appropriated funds. In the event of a reduction or termination of appropriated funds by any state or federal legislative or executive action that reduces, eliminates or otherwise modifies the appropriation or availability of funding for this Agreement and the Scope for Services provided in EXHIBIT B, in whole or in part, the State shall have the right to withhold payment until such funds become available, if ever, and shall have the right to reduce or terminate the Services under this Agreement immediately upon giving the Contractor notice of such reduction or termination. The State shall not be required to transfer funds from any other account or source to the Account identified in block 1.6 in the event funds in that Account are reduced or unavailable.

5. CONTRACT PRICE/PRICE LIMITATION/ PAYMENT.

5.1 The contract price, method of payment, and terms of payment are identified and more particularly described in EXHIBIT C which is incorporated herein by reference.

5.2 Notwithstanding any provision in this Agreement to the contrary, and notwithstanding unexpected circumstances, in no event shall the total of all payments authorized, or actually made hereunder, exceed the Price Limitation set forth in block 1.8. The payment by the State of the contract price shall be the only and the complete reimbursement to the Contractor for all expenses, of whatever nature incurred by the Contractor in the performance hereof and shall be the only and the complete compensation to the Contractor for the Services.

5.3 The State reserves the right to offset from any amounts otherwise payable to the Contractor under this Agreement those liquidated amounts required or permitted by N.H. RSA 80:7 through RSA 80:7-c or any other provision of law.

5.4 The State's liability under this Agreement shall be limited to monetary damages not to exceed the total fees paid. The Contractor agrees that it has an adequate remedy at law for any breach of this Agreement by the State and hereby waives any right to specific performance or other equitable remedies against the State.

6. COMPLIANCE BY CONTRACTOR WITH LAWS AND REGULATIONS/EQUAL EMPLOYMENT OPPORTUNITY.

6.1 In connection with the performance of the Services, the Contractor shall comply with all applicable statutes, laws, regulations, and orders of federal, state, county or municipal authorities which impose any obligation or duty upon the Contractor, including, but not limited to, civil rights and equal employment opportunity laws and the Governor's order on Respect and Civility in the Workplace, Executive order 2020-01. In addition, if this Agreement is funded in any part by monies of the United States, the Contractor shall comply with all federal executive orders, rules, regulations and statutes, and with any rules, regulations and guidelines as the State or the United States issue to implement these regulations. The Contractor shall also comply with all applicable intellectual property laws.

6.2 During the term of this Agreement, the Contractor shall not discriminate against employees or applicants for employment because of age, sex, sexual orientation, race, color, marital status, physical or mental disability, religious creed, national origin, gender identity, or gender expression, and will take affirmative action to prevent such discrimination, unless exempt by state or federal law. The Contractor shall ensure any subcontractors comply with these nondiscrimination requirements.

6.3 No payments or transfers of value by Contractor or its representatives in connection with this Agreement have or shall be made which have the purpose or effect of public or commercial bribery, or acceptance of or acquiescence in extortion, kickbacks, or other unlawful or improper means of obtaining business.

6.4. The Contractor agrees to permit the State or United States access to any of the Contractor's books, records and accounts for the purpose of ascertaining compliance with this Agreement and all rules, regulations and orders pertaining to the covenants, terms and conditions of this Agreement.

7. PERSONNEL.

7.1 The Contractor shall at its own expense provide all personnel necessary to perform the Services. The Contractor warrants that all personnel engaged in the Services shall be qualified to perform the Services and shall be properly licensed and otherwise authorized to do so under all applicable laws.

7.2 The Contracting Officer specified in block 1.9, or any successor, shall be the State's point of contact pertaining to this Agreement.

Contractor Initials MP

Date 10/9/2024

8. EVENT OF DEFAULT/REMEDIES.

8.1 Any one or more of the following acts or omissions of the Contractor shall constitute an event of default hereunder ("Event of Default"):

8.1.1 failure to perform the Services satisfactorily or on schedule;

8.1.2 failure to submit any report required hereunder; and/or

8.1.3 failure to perform any other covenant, term or condition of this Agreement.

8.2 Upon the occurrence of any Event of Default, the State may take any one, or more, or all, of the following actions:

8.2.1 give the Contractor a written notice specifying the Event of Default and requiring it to be remedied within, in the absence of a greater or lesser specification of time, thirty (30) calendar days from the date of the notice; and if the Event of Default is not timely cured, terminate this Agreement, effective two (2) calendar days after giving the Contractor notice of termination;

8.2.2 give the Contractor a written notice specifying the Event of Default and suspending all payments to be made under this Agreement and ordering that the portion of the contract price which would otherwise accrue to the Contractor during the period from the date of such notice until such time as the State determines that the Contractor has cured the Event of Default shall never be paid to the Contractor;

8.2.3 give the Contractor a written notice specifying the Event of Default and set off against any other obligations the State may owe to the Contractor any damages the State suffers by reason of any Event of Default; and/or

8.2.4 give the Contractor a written notice specifying the Event of Default, treat the Agreement as breached, terminate the Agreement and pursue any of its remedies at law or in equity, or both.

9. TERMINATION.

9.1 Notwithstanding paragraph 8, the State may, at its sole discretion, terminate the Agreement for any reason, in whole or in part, by thirty (30) calendar days written notice to the Contractor that the State is exercising its option to terminate the Agreement.

9.2 In the event of an early termination of this Agreement for any reason other than the completion of the Services, the Contractor shall, at the State's discretion, deliver to the Contracting Officer, not later than fifteen (15) calendar days after the date of termination, a report ("Termination Report") describing in detail all Services performed, and the contract price earned, to and including the date of termination. In addition, at the State's discretion, the Contractor shall, within fifteen (15) calendar days of notice of early termination, develop and submit to the State a transition plan for Services under the Agreement.

10. PROPERTY OWNERSHIP/DISCLOSURE.

10.1 As used in this Agreement, the word "Property" shall mean all data, information and things developed or obtained during the performance of, or acquired or developed by reason of, this Agreement, including, but not limited to, all studies, reports, files, formulae, surveys, maps, charts, sound recordings, video recordings, pictorial reproductions, drawings, analyses, graphic representations, computer programs, computer printouts, notes, letters, memoranda, papers, and documents, all whether finished or unfinished.

10.2 All data and any Property which has been received from the State, or purchased with funds provided for that purpose under this Agreement, shall be the property of the State, and shall be returned to the State upon demand or upon termination of this Agreement for any reason.

10.3 Disclosure of data, information and other records shall be governed by N.H. RSA chapter 91-A and/or other applicable law. Disclosure requires prior written approval of the State.

11. CONTRACTOR'S RELATION TO THE STATE. In the performance of this Agreement the Contractor is in all respects an independent contractor, and is neither an agent nor an employee of the State. Neither the Contractor nor any of its officers, employees, agents or members shall have authority to bind the State or receive any benefits, workers' compensation or other emoluments provided by the State to its employees.

12. ASSIGNMENT/DELEGATION/SUBCONTRACTS.

12.1 Contractor shall provide the State written notice at least fifteen (15) calendar days before any proposed assignment, delegation, or other transfer of any interest in this Agreement. No such assignment, delegation, or other transfer shall be effective without the written consent of the State.

12.2 For purposes of paragraph 12, a Change of Control shall constitute assignment. "Change of Control" means (a) merger, consolidation, or a transaction or series of related transactions in which a third party, together with its affiliates, becomes the direct or indirect owner of fifty percent (50%) or more of the voting shares or similar equity interests, or combined voting power of the Contractor, or (b) the sale of all or substantially all of the assets of the Contractor.

12.3 None of the Services shall be subcontracted by the Contractor without prior written notice and consent of the State.

12.4 The State is entitled to copies of all subcontracts and assignment agreements and shall not be bound by any provisions contained in a subcontract or an assignment agreement to which it is not a party.

13. INDEMNIFICATION. The Contractor shall indemnify, defend, and hold harmless the State, its officers, and employees from and against all actions, claims, damages, demands, judgments, fines, liabilities, losses, and other expenses, including, without limitation, reasonable attorneys' fees, arising out of or relating to this Agreement directly or indirectly arising from death, personal injury, property damage, intellectual property infringement, or other claims asserted against the State, its officers, or employees caused by the acts or omissions of negligence, reckless or willful misconduct, or fraud by the Contractor, its employees, agents, or subcontractors. The State shall not be liable for any costs incurred by the Contractor arising under this paragraph 13. Notwithstanding the foregoing, nothing herein contained shall be deemed to constitute a waiver of the State's sovereign immunity, which immunity is hereby reserved to the State. This covenant in paragraph 13 shall survive the termination of this Agreement.

Contractor Initials MP

Date 10/9/2024

14. INSURANCE.

14.1 The Contractor shall, at its sole expense, obtain and continuously maintain in force, and shall require any subcontractor or assignee to obtain and maintain in force, the following insurance:

14.1.1 commercial general liability insurance against all claims of bodily injury, death or property damage, in amounts of not less than $1,000,000 per occurrence and $2,000,000 aggregate or excess; and

14.1.2 special cause of loss coverage form covering all Property subject to subparagraph 10.2 herein, in an amount not less than 80% of the whole replacement value of the Property.

14.2 The policies described in subparagraph 14.1 herein shall be on policy forms and endorsements approved for use in the State of New Hampshire by the N.H. Department of Insurance, and issued by insurers licensed in the State of New Hampshire.

14.3 The Contractor shall furnish to the Contracting Officer identified in block 1.9, or any successor, a certificate(s) of insurance for all insurance required under this Agreement. At the request of the Contracting Officer, or any successor, the Contractor shall provide certificate(s) of insurance for all renewal(s) of insurance required under this Agreement. The certificate(s) of insurance and any renewals thereof shall be attached and are incorporated herein by reference.

15. WORKERS' COMPENSATION.

15.1 By signing this agreement, the Contractor agrees, certifies and warrants that the Contractor is in compliance with or exempt from, the requirements of N.H. RSA chapter 281-A *("Workers' Compensation").*

15.2 To the extent the Contractor is subject to the requirements of N.H. RSA chapter 281-A, Contractor shall maintain, and require any subcontractor or assignee to secure and maintain, payment of Workers' Compensation in connection with activities which the person proposes to undertake pursuant to this Agreement. The Contractor shall furnish the Contracting Officer identified in block 1.9, or any successor, proof of Workers' Compensation in the manner described in N.H. RSA chapter 281-A and any applicable renewal(s) thereof, which shall be attached and are incorporated herein by reference. The State shall not be responsible for payment of any Workers' Compensation premiums or for any other claim or benefit for Contractor, or any subcontractor or employee of Contractor, which might arise under applicable State of New Hampshire Workers' Compensation laws in connection with the performance of the Services under this Agreement.

16. WAIVER OF BREACH. A State's failure to enforce its rights with respect to any single or continuing breach of this Agreement shall not act as a waiver of the right of the State to later enforce any such rights or to enforce any other or any subsequent breach.

17. NOTICE. Any notice by a party hereto to the other party shall be deemed to have been duly delivered or given at the time of mailing by certified mail, postage prepaid, in a United States Post Office addressed to the parties at the addresses given in blocks 1.2 and 1.4, herein.

18. AMENDMENT. This Agreement may be amended, waived or discharged only by an instrument in writing signed by the parties hereto and only after approval of such amendment, waiver or discharge by the Governor and Executive Council of the State of New Hampshire unless no such approval is required under the circumstances pursuant to State law, rule or policy.

19. CHOICE OF LAW AND FORUM.

19.1 This Agreement shall be governed, interpreted and construed in accordance with the laws of the State of New Hampshire except where the Federal supremacy clause requires otherwise. The wording used in this Agreement is the wording chosen by the parties to express their mutual intent, and no rule of construction shall be applied against or in favor of any party.

19.2 Any actions arising out of this Agreement, including the breach or alleged breach thereof, may not be submitted to binding arbitration, but must, instead, be brought and maintained in the Merrimack County Superior Court of New Hampshire which shall have exclusive jurisdiction thereof.

20. CONFLICTING TERMS. In the event of a conflict between the terms of this P-37 form (as modified in EXHIBIT A) and any other portion of this Agreement including any attachments thereto, the terms of the P-37 (as modified in EXHIBIT A) shall control.

21. THIRD PARTIES. This Agreement is being entered into for the sole benefit of the parties hereto, and nothing herein, express or implied, is intended to or will confer any legal or equitable right, benefit, or remedy of any nature upon any other person.

22. HEADINGS. The headings throughout the Agreement are for reference purposes only, and the words contained therein shall in no way be held to explain, modify, amplify or aid in the interpretation, construction or meaning of the provisions of this Agreement.

23. SPECIAL PROVISIONS. Additional or modifying provisions set forth in the attached EXHIBIT A are incorporated herein by reference.

24. FURTHER ASSURANCES. The Contractor, along with its agents and affiliates, shall, at its own cost and expense, execute any additional documents and take such further actions as may be reasonably required to carry out the provisions of this Agreement and give effect to the transactions contemplated hereby.

25. SEVERABILITY. In the event any of the provisions of this Agreement are held by a court of competent jurisdiction to be contrary to any state or federal law, the remaining provisions of this Agreement will remain in full force and effect.

26. ENTIRE AGREEMENT. This Agreement, which may be executed in a number of counterparts, each of which shall be deemed an original, constitutes the entire agreement and understanding between the parties, and supersedes all prior agreements and understandings with respect to the subject matter hereof.

Contractor Initials MP

Date 10/9/2024

EXHIBIT A - SPECIAL PROVISIONS

There are no special provisions of this contract.

Contractor Initials MP

Date 10/9/2024

EXHIBIT B - SCOPE OF SERVICES

1. **INTRODUCTION:**
   1.1. 3M Company (hereinafter referred to as the "Contractor") hereby agrees to provide the State of New Hampshire (hereinafter referred to as the "State"), Department of Administrative Services, with Retroreflective and Non-reflective Sheeting items in accordance with the bid submission in response to State Request for Bid 2954-25 and as described herein.

2. **CONTRACT DOCUMENTS:**
   2.1. This Contract consists of the following documents ("Contract Documents"):
      2.1.1. State of New Hampshire Terms and Conditions, General Provisions Form P-37
      2.1.2. EXHIBIT A Special Provisions
      2.1.3. EXHIBIT B Scope of Services
      2.1.4. EXHIBIT C Method of Payment
      2.1.5. EXHIBIT D RFB 2954-25
      2.1.6. EXHIBIT E Contractor's Bid Response
   2.2. In the event of any conflict among the terms or provisions of the documents listed above, the following order of priority shall indicate which documents control: (1), Form Number P-37 as modified by EXHIBIT A "Special Provisions, (2) EXHIBIT B "Scope of Services," (3) EXHIBIT C "Method of Payment," (4) EXHIBIT D "RFB 2954-25 ," and (5) EXHIBIT E "Contractor's Bid Response."

3. **TERM OF CONTRACT:**
   3.1. The term of the contract shall commence on November 1, 2024, or upon approval of the Governor and Executive Council, whichever is later, through October 31, 2027, a period of approximately three (3) years.
   3.2. The contract may be extended for up to an additional two (2) years thereafter under the same terms, conditions and pricing structure upon the mutual agreement between the Contractor and the State with the approval of the Commissioner of the Department of Administrative Services.
   3.3. The maximum term of the Contract (including all extensions) cannot exceed five (5) years.

4. **SPECIFICATIONS:**
   4.1. Complete specifications required are detailed in the SCOPE OF WORK section of this contract.

5. **SCOPE OF WORK:**
   5.1. Contractor shall supply all labor, tools, transportation, materials, equipment and permits as necessary and required to perform services as described herein.
   5.2. To ensure compatibility of materials used for traffic signs, all materials furnished shall be from a single manufacturer.
   5.3. Materials shall be available in manufacturer's standard roll widths, at a minimum including 12, 18, 24, 30, 36, and 48-inch nominal widths.
   5.4. Roll Goods
      5.4.1. When supplied as roll goods, the sheeting and overlay film shall be of good appearance, free from ragged edges, cracks and extraneous materials. The maximum number of splices in each roll shall be three per 50 yards of material. Splices shall be butted. The materials shall be packed snugly in corrugated fiberboard cartons, in accordance with commercially accepted standards. Each carton shall clearly stipulate the brand, quantity, size, lot or run number, and color. Stored under normal conditions the sheeting and overlay film as furnished shall be suitable for use for a minimum shelf life period of one year.
   5.5. Materials shall comply with ASTM D4956 Type I and shall have manufacturer's standard warranty.
   5.6. Materials shall comply ASTM D4956 for the respective Type, shall meet the following Certification and Warranty Requirements, and (except for Item 1G) shall be listed on NHDOT's Qualified Products List as of the date bids are closed:

Contractor Initials MP

Date 10/9/2024

5.6.1. Certification: the sheeting manufacturer shall submit with each lot or shipment, a certification stating that the material supplied will meet all the specifications noted within and all the requirements listed herein.

5.6.2. Sheeting shall have a full manufacturer's warranty of at least 7 years and a partial manufacturer's warranty from the end of the full manufacturer's warranty period to at least 10 years, except for orange sheeting, which shall have at least a 3-year full warranty. The full warranty shall cover sign replacement including materials and labor. Partial warranty shall cover the supply of replacement sheeting only.

5.6.3. Warranty on sheeting shall cover the loss of colorfastness, cracking, and any other conditions inherent to the sheeting, including inks and overlay film that causes it to be ineffective in providing the direction to the motorists as intended. Warranty shall also cover the loss of retro reflectivity to below 80% of the initial minimum values listed in ASTM D4956 for the appropriate sheeting type during the full warranty period and to below 70% of the values during the partial warranty period.

5.6.4. Agency obligation: the using agency shall be responsible for dating all the signs at the time of application of sheeting. That date constitutes the start of the certification and performance requirements.

5.7. Washers, to protect the sign surface from damage by bolts or other fasteners shall be supplied at no charge.

5.8. For a given sheeting type (Item), all colors will be at the same price, unless where noted for fluorescent colors.

5.9. Screen inks, process colors, toners, clears and slip sheeting shall be specifically formulated for use with the sheeting in Section 1 and shall be supplied at no charge

5.9.1. Additional Specification for – Overlay Films for use with Retroreflective Sheeting

5.9.1.1. General Characteristics – When prepared and fabricated in accordance with the manufacturer's recommendations, a finished sign face made of Overlay film and retroreflective sheeting, shall comply with the appearance, specification, and good workmanship designated by the using agency for sign faces constructed of colored retroreflective sheeting of the same type.

5.9.1.2. Instruction and Training. The vendor supplying the Overlay film requirement shall provide the services of a manufacturer's qualified technician for instruction and training at up to three state agency sign manufacturing facilities supplied by this contract. This instruction shall be available on a quarterly basis if needed at no additional cost, and shall include but not be limited to, training films, demonstration of material application, equipment operation, packaging, storage and other proven sign shop practices as they apply to the overlay film supplied by the vendor, and to assure that the resulting signs can comply with the applicable specifications.

5.10. Unless otherwise specified herein, all services/deliveries performed under this Contract(s) shall be performed between the hours of 8:00 A.M. and 4:00 P.M. for State business days, unless other arrangements are made in advance with the State. Any deviation in work hours shall be pre-approved by the Contracting Officer. The State requires ten-day advance knowledge of said work schedules to provide security and access to respective work areas. No premium charges shall be paid for any off-hour work. All references to the time of day are Eastern Standard Time (EST).

5.11. If sub-contractors are to be utilized, please include information regarding the proposed sub-contractors including the name of the company, their address, contact person and three references for clients they are currently servicing. Approval by the State must be received prior to a sub-contractor starting any work.

5.12. The Contractor shall not commence work until a conference is held with each agency, at which representatives of the Contractor and the State are present. The conference shall be arranged by the requesting agency (State).

5.13. The State shall require correction of defective work or damages to any part of a building or its appurtenances when caused by the Contractor's employees, equipment or supplies. The Contractor shall replace in satisfactory condition all defective work and damages rendered thereby or any other damages incurred. Upon failure of the Contractor to proceed promptly with the necessary corrections, the State may withhold any amount necessary to correct all defective work or damages from payments to the Contractor.

Contractor Initials MP

Date 10/9/2024

5.14. The work staff shall consist of qualified persons completely familiar with the products and equipment they shall use. The Contracting Officer may require the Contractor to dismiss from the work such employees as deems incompetent, careless, insubordinate, or otherwise objectionable, or whose continued employment on the work is deemed to be contrary to the public interest or inconsistent with the best interest of security and the State.

5.15. The Contractor or their personnel shall not represent themselves as employees or agents of the State.

5.16. While on State property, employees shall be subject to the control of the State, but under no circumstances shall such persons be deemed to be employees of the State.

5.17. All personnel shall observe all regulations or special restrictions in effect at the State Agency.

5.18. The Contractor's personnel shall be allowed only in areas where services are being performed. The use of State telephones is prohibited.

5.19. Ordering System: Ordering system must be web-based and accessible to the State at all times. Ordering and inventory system must be capable of electronic order approval process and must have an email-based notification function. The ordering system must contain a field where the State can enter their 7-digit Purchase Order number. Contractor shall provide training, on-site or virtual, as requested by the State, on how to use the system at no additional cost. Preferred ordering system capabilities and functionality includes, but is not limited to:

5.19.1. Web-based, Inventory control capabilities

5.19.2. ability to interface with different point of sales systems

5.19.3. ability to use on multiple devices to include but not limited to tablets, iPhones

5.19.4. ability to include reference numbers

5.19.5. ability to provide a variety of reports including dashboard reporting

5.19.6. ability to edit, cancel orders, print orders, order tracking functionality, ability to split orders, and online help features.

5.20. Product information must be clearly identified on packaging.

5.21. All orders shall be inspected and accepted by the State authorized representative by signing and dating the Contractor's delivery ticket. Delivery ticket must include date of delivery, location of delivery, itemized by product description, product number, and quantity delivered at a minimum.

5.22. Recalls: Contractor shall have the ability to track all products ordered and delivered. The Contractor shall have a product recall program that provides for notification within twenty-four (24) hours of the recall to the State which has received the recalled products. The Contractor shall pick up and replace all products that are subject to the recall at no additional cost to the State. Recalled products that are returned shall be credited on the next invoice.

5.23. Sample products for evaluation: All products offered under this contract may be selected by the State at any time, prior to or throughout the term of the contract, to provide for examination and testing. Samples shall be clearly labeled as to the contents and supplier. Samples submitted shall be the same product to be delivered under this contract. All samples must be provided at no charge to the State.

6. BACKORDERS AND SUBSTITUTIONS:

6.1. The Contractor shall maintain adequate inventory levels to avoid out-of-stock situations. Any out-of-stock products must be communicated to the requestor within 24 hours of the placement of the order. No substitutions shall be made without the written consent of the State.

6.2. Items ordered but not delivered in error by the Contractor shall be credited on the next invoice or products delivered at a later date as mutually agreed upon in writing.

6.3. The Contractor shall notify the State Contracting Officer of any items no longer available and provide a recommended replacement.

7. RETURNED GOODS:

7.1. The Contractor shall provide credit and/or replacement of products that are delivered spoiled, outdated, damaged or defective, or products shipped in error by the Contractor within 48 hours of receipt and at no cost to

Contractor Initials MP

Date 10/9/2024

the State. The Contractor may elect to dispose of product rather than return items to them with no charge to the State if products are delivered spoiled, outdated, damaged or defective, or products shipped in error by the Contractor. The Contractor shall accept returns of non-perishable items if ordered in error by the State at a date agreed upon in writing by both parties or at the next delivery date. All items being returned shall be kept in the appropriate climate-controlled storage by the State until the agreed upon return date.

8. DELIVERY LOCATIONS:

8.1. The following are the current State of New Hampshire agency/institution locations which, if you are awarded a contract, you are expected to service. The State of New Hampshire reserves the right to add locations to this list at the contract prices or to delete locations as mutually agreed upon in writing by executing an amendment to the contract. This listing does not include any eligible participants.

9. DELIVERY:

9.1. The Contractor shall be required to accomplish delivery of any item ordered under the contract within thirty to one hundred-twenty (30-120) business days from the placement of the order.

9.2. The use of a private carrier to make delivery does not relieve the Contractor from the responsibility of meeting the delivery requirement.

9.3. Delivery shall be made as ordered and in accordance with the terms specified herein. Unless otherwise specified by the State in writing, delivery shall be to a loading dock or receiving platform. The Contractor or Contractor's shipping designee shall be responsible for removal of product from the carrier and placement on the State loading dock or receiving platform. The State receiving personnel are not required to assist in this process. Reasonable compliance with delivery terms shall be final and binding and the burden of proof of proper receipt of the order shall rest with the Contractor.

9.4. Label, package and palletize all orders in accordance with industry standard to ensure safe handling and proper and timely delivery. If a shipment is not on pallets or properly palletized at the time of delivery, the Contractor shall be responsible to palletize all products at the delivery Site. Contractor shall pick up all empty pallets on the next scheduled delivery day.

9.5. Deliveries missed due to inclement weather, breakdowns or other unforeseen condition must be rescheduled to the next business day.

9.6. Contractor shall notify the State of any holiday changes or lengthy closures in writing at least 21 calendar days prior to the holiday or closure.

9.7. Permanent modifications to the delivery schedule shall be approved by the State in writing before changes are implemented.

9.8. The Contractor shall be responsible for palletizing all products at the delivery site if a shipment is not on pallets or properly palletized at the time of delivery (i.e., if a pallet is tipped over during shipment).

10. ADDITIONAL REQUIREMENTS:

10.1. The State, in its sole discretion, may setoff and withhold (1) any costs or expenses including but not limited to costs or expenses such as overtime, that the State incurs resulting from the Contractor's unexcused breach under this contract and under any other agreement or arrangement that the Contractor has with the State and (2) any other amounts of whatever nature that are due or may become due from the State to the Contractor, against amounts otherwise due or that may become due to the Contractor under this Contract, or under any other agreement or arrangement that the Contractor has with the State. The State's right of setoff and to withhold shall not be deemed to be the State's exclusive remedy for the Contractor's or Contractor Parties' breach of this contract, all of which shall survive any setoffs and withholdings by the State.

10.2. The Contractor or their personnel shall not represent themselves as employees or agents of the State.

10.3. While on State property, employees shall be subject to the control of the State, but under no circumstances shall such persons be deemed to be employees of the State.

10.4. All personnel shall observe all regulations or special restrictions in effect at the State Agency.

Contractor Initials MP

Date 10/9/2024

11. ACCOUNT REPRESENTATIVE:

11.1. The Contractor shall assign a dedicated account representative and a backup in their absence who will be responsible for the daily administration of this Contract. The account representative shall be familiar with all Contract requirements to ensure compliance with the terms of the Contract. The account representative shall respond by phone or email to Client Agency inquiries within 24 hours of initial contact or the next business day if after normal business hours. The account representative's responsibilities shall include but not be limited to:

11.1.1. Coordinate business review meeting(s) either virtually or on-site with the State held at a cadence requested by the State.

11.1.2. Provide recommended process and productivity improvements related to potential cost savings to the State for consideration quarterly.

11.1.3. Provide information and product offerings to bring the latest industry ideas and culinary trends to the State as applicable.

11.1.4. Provide training on the use of the Contractor's portal as needed with no charge to the State.

12. USAGE REPORTING:

12.1. The Contractor shall submit a quarterly and annual usage report for analysis for each state agency or eligible participant. Reports are due no later than 30 days after the end of each calendar quarter to the Bureau of Purchase and Property, James Poulin and sent electronic to James.M.Poulin@DAS.NH.Gov. At a minimum, the Report shall include:

12.1.1. Contract Number

12.1.2. Utilizing Agency and Eligible Participant

12.1.3. Services/Products Purchased (showing the manufacturer, item, part number, and the final cost.)

12.1.4. Recycling documentation with respect to content used in the manufacture, development and distribution process of goods and services sold. This report shall include but not be limited to:

12.1.4.1. Percentage of recycled materials contained within finished products

12.1.4.2. Percentage of waste recycled throughout the manufacturing process

12.1.4.3. Types and volume of packaging used for transport

12.1.4.4. Any associated material avoided and/or recycled as applicable under contract

12.1.4.5. A standardized reporting form will be provided after contract award

12.1.5. Total Cost of all Services/Products Purchased. Ability to sort by agency/eligible participant.

12.1.6. Preferred in Excel format

13. OBLIGATIONS AND LIABILITY OF THE CONTRACTOR:

13.1. The Contractor shall provide all services strictly pursuant to, and in conformity with, the specifications described in State RFB #2954-25, as described herein, and under the terms of this Contract.

13.2. It is the responsibility of the Contractor to maintain this contract and New Hampshire Vendor Registration with up to date contact information.

13.3. Contract specific contact information (Sales contact, Contractor contract manager, etc.) shall be sent to the State's Contracting Office listed in Box 1.9 of Form P-37.

13.4. Additionally, all updates i.e., telephone numbers, contact names, email addresses, W9, tax identification numbers are required to be current through a formal electronic submission to the Bureau of Purchase and Property at: https://das.nh.gov/purchasing/vendorregistration/(S(q0fzcv55qhaeqs45jpyq5i45))/welcome.aspx.

13.5. The Contractor shall agree to hold the State of NH harmless from liability arising out of injuries or damage caused while performing this work. The Contractor shall agree that any damage to building(s), materials, equipment, or other property during the performance of the service shall be repaired at its own expense, to the State's satisfaction.

13.6. The Contractor shall not be allowed to require any other type of order, nor shall the Contractor be allowed to require the filling out or signing of any other document by State of New Hampshire personnel.

Contractor Initials MP

Date 10/9/2024

14. DEBARMENT, SUSPENSION, INELIGIBILITY AND VOLUNTARY EXCLUSION LOWER TIER COVERED TRANSACTIONS:

The Contractor certifies, by signature of this contract, that neither it nor its principals is presently debarred, suspended, proposed for debarment, declared ineligible, or voluntarily excluded from participation in this transaction by any Federal Department or Agency.

15. CONFIDENTIALITY & CRIMINAL RECORD:

15.1. If requested by the using agency, the Contractor and its employees, and Sub-Contractors (if any), shall be required to sign and submit a Confidential Nature of Department Records Form and a Criminal Authorization Records Form. These forms shall be submitted to the individual using agency prior to the start of any work.

Contractor Initials MP

Date 10/9/2024

EXHIBIT C - METHOD OF PAYMENT

16. CONTRACT PRICE:

16.1. The Contractor hereby agrees to provide Retroreflective and Non-reflective Sheeting in complete compliance with the terms and conditions specified in Exhibit B for an amount up to and not to exceed a price of $411,972.00; this figure shall not be considered a guaranteed or minimum figure; however, it shall be considered a maximum figure from the effective date through the expiration date as indicated in Form P-37 Block 1.7.

17. PRICING STRUCTURE:

17.1.

Traffic Sign Retroreflective Sheeting & Associated Materials			
UOM	**Product Description**	**Unit Price**	**Manufacturer and Code#**
Engineer Grade Prismatic Retroreflective Sheeting, ASTM D4956 Type I			
Sq. Ft.	Pressure Sensitive (All traffic colors excluding red, blue and brown)	$0.90	3M 3430 Series and 7300 Series
High Intensity Grade Microprismatic Lens Retroreflective Sheeting, ASTM D4956 Type IV			
Sq. Ft.	Pressure Sensitive (All traffic Colors)	$0.98	3M 3930 Series
Cube Corner Microprismatic Retroreflective Sheeting, ASTM D4959 Type VIII			
Sq. Ft.	All Standard Colors (Except Fluorescent)	$1.72	3M DG3 - 4090
Sq. Ft.	Fluorescent Orange	$1.72	3M DG3 - 4084
Sq. Ft.	Fluorescent Yellow	$1.72	3M DG3 - 4081
Sq. Ft.	Fluorescent Yellow-Green	$1.72	3M DG3 - 4083
Cube Corner Microprismatic Retroreflective Sheeting, ASTM D4959 Type IX			
Sq. Ft	All Standard Colors (Except Fluorescent)	$1.72	3M DG3 - 4090
Sq. Ft	Fluorescent Orange	$1.72	3M DG3 - 4084
Sq. Ft	Fluorescent Yellow	$1.72	3M DG3 - 4081
Sq. Ft	Fluorescent Yellow-Green	$1.72	3M DG3 - 4083
Cube Corner Microprismatic Retroreflective Sheeting, ASTM D4959 Type XI			
Sq. Ft	All Standard Colors (Except Fluorescent)	$1.72	3M DG3 - 4090
Sq. Ft	Fluorescent Orange	$1.72	3M DG3 - 4084
Sq. Ft	Fluorescent Yellow	$1.72	3M DG3 - 4081
Sq. Ft	Fluorescent Yellow-Green	$1.72	3M DG3 - 4083
Overlay Films for use with Retroreflective Sheeting			
Sq. Ft	Overlay Film (Clear)	$0.77	3M 1170 (Clear)
Sq. Ft	Overlay Film (Colors)	$0.80	3M 1170 (Colors)
Overlay Films for use with Retroreflective Sheeting			
Sq. Ft	Premium Anti-Graffiti Film (Clear)	$1.30	3M 1160i

18. CONTRACTOR'S BALANCE OF PRODUCT LINE ITEMS:

18.1. The items in the Offer Section include the items most commonly purchased by State of New Hampshire agencies and shall be used for award purposes. During the term of contract, the State may purchase other items that relate to the product/categories represented herein from the Contractor's Balance of Product Line. All items ordered shall include all shipping/charges as specified above in "Bid Prices".

19. INVOICE:

19.1. Itemized invoices shall be submitted to the using agency after delivery of the products and include the following at a minimum:

19.1.1. State of NH purchase order (PO) number if applicable

19.1.2. State of NH contract number

19.1.3. State of NH ordering agency information

19.1.3.1. Name and contact information of ordering individual

19.1.3.2. Name of ordering state agency / department

Contractor Initials MP

Date 10/9/2024

19.1.3.3. Address of ordering state agency / department

19.1.3.4. Name and contact information of ordering state agency accounts payable office

19.1.4. Date of purchase

19.1.5. Date of delivery

19.1.6. Contractor order number

19.1.7. Contractor account representative name and contact information

19.1.8. Product description, quantity ordered, quantity delivered, unit price, total price for payment

19.1.9. Items backordered and their delivery date

19.2. Contractor shall be paid within 30 days after receipt of properly documented invoice and acceptance of the work to the State's satisfaction.

20. PAYMENT:

20.1. Payments may be made via ACH or P-Card. Use the following link to enroll with the State Treasury for ACH payments: https://www.nh.gov/treasury.

Contractor Initials MP

Date 10/9/2024

EXHIBIT D - RFB 2954-25

RFB #2954-25 is incorporated here within.

Contractor Initials MP

Date 10/9/2024

EXHIBIT E - CONTRACTOR'S BID

Contractor's bid is incorporated here within.

Contractor Initials MP

Date 10/9/2024

State of New Hampshire
Department of State

CERTIFICATE

I, David M. Scanlan, Secretary of State of the State of New Hampshire, do hereby certify that 3M COMPANY is a Delaware Profit Corporation registered to do business in New Hampshire as 3M COMPANY INC. on January 07, 1972. I further certify that all fees and documents required by the Secretary of State's office have been received and is in good standing as far as this office is concerned.

Business ID: **2528**

Certificate Number: **0006725702**

IN TESTIMONY WHEREOF,
I hereto set my hand and cause to be affixed
the Seal of the State of New Hampshire,
this 26th day of June A.D. 2024.

David M. Scanlan
Secretary of State

Docusign Envelope ID: AC55CE9B-6765-4911-8E89-B3D896C0B43E

3M Company Government Contracts Power of Attorney

By the authority granted the undersigned by the 3M General Counsel, the individuals listed below are hereby appointed as 3M's or its designated subsidiaries, true and lawful attorneys-in-fact for it, and its name, for commercially available products and services and government unique products and services for which 3M or its designated subsidiaries will be a prime contractor, subcontractor or higher tier subcontractor to any federal, state or municipal governmental agency in the United States ("Government Contracts"), to perform acts specified on behalf of this Corporation.

Except as provided below, authority is granted to submit or execute proposals, bids, binding purchase orders, contracts and subcontracts, certifications, representations and warranties, and documents related thereto for Government Contracts; however, this authority does not include (a) research and development services[2]; (b) executing country of origin certifications[5]; or (c) any other authority that is not expressly granted in this document. 3M executives (President, General Manager, etc.) [1], have authority to sign on behalf of their respective Business Unit/staff function, through 3M's Vice President of Government Contract Compliance sub delegation authority. Authority for the individuals below is limited to the specific Business Unit or staff function indicated and such authority may not be subdelegated.

3M Healthcare US Opco LLC
Dickson, Diana
Hong-Larsen, Sally
Husnick, Nick
Lovejoy, Matt
McCloskey, Molly
McDonald, Michael

3M Unitek Corporation
McCloskey, Molly

Advanced Materials Division
Davis, Scott
Hanson, Scott
Jensen, Avery
Lockhart, Bruce
Marshall, Peter (Technical Ceramics only)
Morin, Eric
Utley, Elizabeth
Ward, Charles

Aearo Technologies LLC.
Hinko, David

Automotive and Aerospace Solutions Division
see Government Marketing-Sales

Commercial Branding & Transportation Division
Batchelor, Brent[7]
Macklin, John[7]
Paraschou, Maria
Schray, Katrina[6]
Seputis, Julie[4]
Trac, Phu[4]

Electrical Markets Division
Blair, Jeremiah
Irwin, Mike

Electronics Materials Solutions Division
Anderson, Kevin

Global Occupational Medicine
Lenick, Karyn

Government R&D Contracts Department[2]
Kays, Steven[3]
Martinez, Rita
Hong-Larsen, Sally

3M Health Information Systems
Aiello, Kimberlee
Carr, Megan
Garrison, Garri
Hong-Larsen, Sally
Mathison, John
Peddicord, Kyle
Stanley, Michael
Weidall, Quinn

Industrial Adhesives & Tapes Division
see Government Marketing-Sales
(FSS Contracts Only)

Industrial Mineral Products Division
Erickson, Scott

Medical Solutions Division
McDonald, Michael
Dickson, Diana
Husnick, Nick

Oral Care Solutions Division
Lovejoy, Matt
McCloskey, Molly

Personal Safety Division
see Government Marketing-Sales

Separation & Purification
Towne, Richard

Stationery & Office Supplies Division
see Government Marketing-Sales
(FSS Contracts Only)

©3M 2024. All Rights Reserved. 3M Confidential

Authority Applies to any Business Unit or Staff Function		
Global Channel Services Constantine, Lauri **U.S. Pacific Branches** Mathers, Stephanie Kawasaki, Heidi	**Government Marketing-Sales** Audette-Williams, Michelle Borja, Ralph Hang, Yee Williams, Tabatha	**Government Contract Compliance** Bordas, Rich Horwitz, Charles Robinette, Thomas

Authority to Make Country of Origin Certifications[5]
Trade Compliance Department Bottoms, Paul[5] Goebel, Kathleen[5] Jansen, Lindsay[5] O'Rourke, Elizabeth[5] Radtke Nord, Jodi[5] Schmitz, Jamie[5]

For all appointments, authority may be withdrawn or modified at any time, including upon an individual's change in responsibility.

This Power of Attorney revokes all prior Powers of Attorney with respect to the same matters and shall remain in effect until terminated by the undersigned or any other person authorized to grant powers of attorney on behalf of 3M.

By: DocuSigned by: Charles Horwitz
9952E2154E4B4B7...

Charles Horwitz
Vice President, Government Contract Compliance
3M Company

Date 7/22/2024

[1]3M executives may assign attorney-in-fact authority to their respective business personnel, upon successful completion of Government Contract Compliance Power of Attorney training.

[2]Authority is delegated by 3M's Executive VP R&D and Chief Technology Officer, to the Senior Vice President, Research and Development, for their respective 3M Business Groups, and to certain specified employees in Government Research & Development Contracts, to execute proposals, contracts, subcontracts, and modifications (including certifications, representations, and warranties to comply with certain laws and regulations) for government R&D services.

[3]Authority includes AFRL TIA and Phase 2 activities for N95 lines for contract modifications.

[4]Authority expressly limited to executing Certificates of Conformance.

[5]Authority limited to include only Country of Origin Certifications.

[6]Authority limited to include only Vouchers and Invoices.

[7]Authority limited to include only Premium Warranties

©3M 2024. All Rights Reserved. 3M Confidential

CERTIFICATE OF LIABILITY INSURANCE

DATE (MM/DD/YYYY) 02/26/2024

THIS CERTIFICATE IS ISSUED AS A MATTER OF INFORMATION ONLY AND CONFERS NO RIGHTS UPON THE CERTIFICATE HOLDER. THIS CERTIFICATE DOES NOT AFFIRMATIVELY OR NEGATIVELY AMEND, EXTEND OR ALTER THE COVERAGE AFFORDED BY THE POLICIES BELOW. THIS CERTIFICATE OF INSURANCE DOES NOT CONSTITUTE A CONTRACT BETWEEN THE ISSUING INSURER(S), AUTHORIZED REPRESENTATIVE OR PRODUCER, AND THE CERTIFICATE HOLDER.

IMPORTANT: If the certificate holder is an ADDITIONAL INSURED, the policy(ies) must have ADDITIONAL INSURED provisions or be endorsed. If SUBROGATION IS WAIVED, subject to the terms and conditions of the policy, certain policies may require an endorsement. A statement on this certificate does not confer rights to the certificate holder in lieu of such endorsement(s).

PRODUCER Willis Towers Watson Midwest, Inc. c/o 26 Century Blvd P.O. Box 305191 Nashville, TN 372305191 USA	CONTACT NAME: Willis Towers Watson Certificate Center PHONE (A/C, No, Ext): 1-877-945-7378 FAX (A/C, No): 1-888-467-2378 E-MAIL ADDRESS: certificates@willis.com
	INSURER(S) AFFORDING COVERAGE — NAIC #
	INSURER A: Old Republic Insurance Company — 24147
INSURED 3M Company Insurance Department 3M Center, 223-2N-32 St. Paul, MN 55144	INSURER B:
	INSURER C:
	INSURER D:
	INSURER E:
	INSURER F:

COVERAGES CERTIFICATE NUMBER: W32711802 REVISION NUMBER:

THIS IS TO CERTIFY THAT THE POLICIES OF INSURANCE LISTED BELOW HAVE BEEN ISSUED TO THE INSURED NAMED ABOVE FOR THE POLICY PERIOD INDICATED. NOTWITHSTANDING ANY REQUIREMENT, TERM OR CONDITION OF ANY CONTRACT OR OTHER DOCUMENT WITH RESPECT TO WHICH THIS CERTIFICATE MAY BE ISSUED OR MAY PERTAIN, THE INSURANCE AFFORDED BY THE POLICIES DESCRIBED HEREIN IS SUBJECT TO ALL THE TERMS, EXCLUSIONS AND CONDITIONS OF SUCH POLICIES. LIMITS SHOWN MAY HAVE BEEN REDUCED BY PAID CLAIMS.

INSR LTR	TYPE OF INSURANCE	ADDL INSD	SUBR WVD	POLICY NUMBER	POLICY EFF (MM/DD/YYYY)	POLICY EXP (MM/DD/YYYY)	LIMITS	
A	X COMMERCIAL GENERAL LIABILITY CLAIMS-MADE X OCCUR GEN'L AGGREGATE LIMIT APPLIES PER X POLICY PRO-JECT LOC OTHER:			NHZX 317359	03/01/2023	03/01/2026	EACH OCCURRENCE DAMAGE TO RENTED PREMISES (Ea occurrence) MED EXP (Any one person) PERSONAL & ADV INJURY GENERAL AGGREGATE PRODUCTS - COMP/OP AGG	$ 10,000,000 $ 1,000,000 $ $ 10,000,000 $ 10,000,000 $ 10,000,000 $
A	AUTOMOBILE LIABILITY X ANY AUTO OWNED AUTOS ONLY HIRED AUTOS ONLY SCHEDULED AUTOS NON-OWNED AUTOS ONLY			NHZD 317357	03/01/2023	03/01/2026	COMBINED SINGLE LIMIT (Ea accident) BODILY INJURY (Per person) BODILY INJURY (Per accident) PROPERTY DAMAGE (Per accident)	$ 2,000,000 $ $ $ $
	UMBRELLA LIAB EXCESS LIAB DED RETENTION $						EACH OCCURRENCE AGGREGATE	$ $ $
A	WORKERS COMPENSATION AND EMPLOYERS' LIABILITY ANY PROPRIETOR/PARTNER/EXECUTIVE OFFICER/MEMBER EXCLUDED? (Mandatory in NH) Y/N No If yes, describe under DESCRIPTION OF OPERATIONS below	N/A		NHC309963-24	03/01/2024	03/01/2025	X PER STATUTE OTH-ER E.L. EACH ACCIDENT E.L. DISEASE - EA EMPLOYEE E.L. DISEASE - POLICY LIMIT	 $ 2,000,000 $ 2,000,000 $ 2,000,000

DESCRIPTION OF OPERATIONS / LOCATIONS / VEHICLES (ACORD 101, Additional Remarks Schedule, may be attached if more space is required)

CERTIFICATE HOLDER	CANCELLATION
Evidence of Coverage	SHOULD ANY OF THE ABOVE DESCRIBED POLICIES BE CANCELLED BEFORE THE EXPIRATION DATE THEREOF, NOTICE WILL BE DELIVERED IN ACCORDANCE WITH THE POLICY PROVISIONS. AUTHORIZED REPRESENTATIVE

© 1988-2016 ACORD CORPORATION. All rights reserved.

The ACORD name and logo are registered marks of ACORD

NEW HAMPSHIRE DEPARTMENT OF ADMINISTRATIVE SERVICES

DIVISION OF PROCUREMENT AND SUPPORT SERVICES

REQUEST FOR BID FOR RETROREFLECTIVE & NON-REFLECTIVE SHEETING 2954-25

DUE DATE: 9/9/2024 9:00:00 AM (EASTERN TIME)

Bidder Initials mp

Date 9/6/2024

Table of Contents

1. PURPOSE: 3
2. INSTRUCTIONS TO VENDOR: 3
3. BID SUBMITTAL: 3
4. BID INQUIRIES: 3
5. BID DUE DATE: 3
6. ADDENDA: 3
7. TIMELINE: 3
8. TERMS OF SUBMISSION: 4
9. CONTRACT TERM: 4
10. CONTRACT AWARD: 4
11. NOTIFICATION AND AWARD OF CONTRACT(S): 4
12. LIABILITY: 4
13. PUBLIC DISCLOSURE OF BID OR PROPOSAL SUBMISSIONS: 4
14. TERMINATION: 5
15. VENDOR CERTIFICATIONS: 5
16. BID PRICES: 6
17. AUDITS AND ACCOUNTING: 6
18. Account Representative: 6
19. ESTIMATED USAGE: 6
20. USAGE REPORTING: 7
21. ESTABLISHMENT OF ACCOUNTS: 7
22. ELIGIBLE PARTICIPANTS: 7
23. PAYMENT: 7
24. INVOICING: 7
25. VENDOR RESPONSIBILITY: 8
26. IF AWARDED A CONTRACT: 8
27. SPECIFICATION COMPLIANCE: 8
28. SPECIFICATIONS: 9
29. Catalogs/price lists: 9
30. SCOPE OF WORK: 9
31. WARRANTY REQUIREMENTS: 10
32. OBLIGATIONS AND LIABILITY OF THE VENDOR: 11
33. NON-EXCLUSIVE CONTRACT: 11
34. Recalls: 11
35. Sample products for evaluation: 11
36. RETURNED GOODS: 11
37. Backorders and Substitutions: 12
38. ENVIRONMENTALLY FRIENDLY PRODUCTS: 12
39. OFFER: 12
40. VENDOR'S BALANCE OF PRODUCT LINE ITEMS: 12
41. VENDOR CONTACT INFORMATION: 12
42. DELIVERY TIME: 13
43. DELIVERY LOCATIONS: 13
44. ATTACHMENTS: 13
45. Note: To be considered, bid TRANSMITTAL LETTER shall be signed in the space provided. 13
46. The Bid Opening is open to the public online at the following: 13

STATE OF NEW HAMPSHIRE TRANSMITTAL LETTER 17

Bidder Initials mp

Date 9/6/2024

1. **PURPOSE**

1.1. The purpose of this bid invitation is to establish a contract for supply and delivery of Retroflective and Non-reflective Sheeting to the State of New Hampshire with product list and requirements indicated in the SCOPE OF WORK and OFFER sections of this bid invitation, in accordance with the requirements of this bid invitation and any resulting contract.

2. **INSTRUCTIONS TO VENDOR:**

2.1. Read the entire bid invitation prior to filling it out. Complete the pricing information in the "Offer" section (detailed information on how to fill out the pricing information can be found in the "Offer" section); complete the "Vendor Contact Information" section; and finally, fill out, and sign the bid transmittal letter.

3. **BID SUBMITTAL:**

3.1. All bids shall be submitted on this form (or an exact copy), shall be typed, or clearly printed in ink, and shall be received on or before the date and time specified on paragraph 7 of this bid under "Bid Closing". Interested parties may submit a bid to the State of New Hampshire Bureau of Purchase and Property by **email to NH.Purchasing@DAS.NH.Gov**. All bids shall be clearly marked with bid number, date due and purchasing agent's name.

3.2. IF YOU ARE EXPERIENCING DIFFICULTIES EMAILING YOUR BID OR YOU WISH TO VERIFY THAT YOUR BID RESPONSE HAS BEEN RECEIVED, PLEASE CALL (603) 271-2201.

4. **BID INQUIRIES:**

4.1. Any questions, clarifications, and/or requested changes shall be submitted by an individual authorized to commit their organization to the Terms and Conditions of this bid and shall be received in writing at the Bureau of Purchase and Property no later than 4:00 PM on the date listed in the timeline below. Questions shall not be submitted to anyone other than the Purchasing Agent or his/her representative. Bidders that submit questions verbally or in writing to any other State entity or State personnel shall be found in violation of this part and may be found non-compliant.

4.2. Questions shall be submitted by email to James Poulin at James.M.Poulin@DAS.NH.Gov.

4.3. Submissions shall clearly identify the bid Number, the Vendor's name and address and the name of the person submitting the question.

5. **BID DUE DATE:**

5.1. All bid submissions shall be received at the Bureau of Purchase and Property no later than the date and time shown on the transmittal letter of this bid. Submissions received after the date and time specified shall be marked as "Late" and shall not be considered in the evaluation process.

5.2. All offers shall remain valid for a period of one hundred eighty (180) days from the bid due date. A vendor's disclosure or distribution of bids other than to DAS, Bureau of Purchase and Property may be grounds for disqualification.

6. **ADDENDA:**

6.1. In the event it becomes necessary to add to or revise any part of this bid prior to the scheduled submittal date, the NH Bureau of Purchase and Property shall post on our web site any Addenda. Before your submission and periodically prior to the RFB closing, Vendors are required to **check the site for any addenda** or other materials that may have been issued affecting the bid. The web site address is: https://apps.das.nh.gov/bidscontracts/bids.aspx.

7. **TIMELINE:**

7.1. The timeline below is provided as a general guideline and is subject to change. Unless stated otherwise, consider the dates below a "no later than" date.

Bid Solicitation distributed on or by:	8/20/2024
Last day for questions, clarifications, and/or requested changes to bid:	8/30/2024
States response to questions, clarifications, and/or requested changes to bid:	9/6/2024
Bid Closing (Eastern Time):	9/9/2024 9:00 AM

Bidder Initials mp

Date 9/6/2024

8. TERMS OF SUBMISSION:

8.1. All material received in response to this bid shall become the property of the State and shall not be returned to the Vendor. Regardless of the Vendors selected, the State reserves the right to use any information presented in a bid response. The content of each Vendor's bid shall become public information once a contract(s) has been awarded.

8.2. A responding bid that has been completed and signed by your representative shall constitute your company's acceptance of all State of New Hampshire terms and conditions and shall legally obligate your company to these terms and conditions.

8.3. A signed response further signifies that from the time the bid is published (bid solicitation date and time) until a contract is awarded, no bidder shall offer or give, directly or indirectly, any gift, expense reimbursement, or honorarium, as defined by RSA 15-B, to any elected official, public official, public employee, constitutional official, or family member of any such official or employee who shall select, evaluate, or award the RFB.

8.4. Furthermore, a signed response signifies that any terms and/or conditions that may be or have been submitted by the Vendor are specifically null and void and are not a part of this bid invitation or any awarded purchase order, even if said terms and/or conditions contain language to the contrary.

8.5. The form P-37 Contract attached hereto shall be part of this bid and the basis for the contract(s). The successful Vendor and the State, following notification, shall promptly execute this contract form, which is to be completed by incorporating the service requirements and price conditions established by the vendor's offer.

8.6. CHAPTER ADM 600 PROCUREMENT AND PROPERTY RULES APPLY TO AND ARE MADE A PART HEREOF.

8.7. Complete bids shall be filled out on the original documents and format that are a part of this bid invitation. Vendors may submit additional paperwork with pricing, but all pricing shall be on the documents provided with this bid invitation and in the State's format.

9. CONTRACT TERM:

9.1. The term of the contract shall commence on November 1, 2024, or upon approval of the Governor and Executive Council, whichever is later, through October 31, 2027, a period of approximately three (3) years.

9.2. The contract may be extended for up to an additional two (2) years thereafter under the same terms, conditions, and pricing structure upon the mutual agreement between the successful Vendor and the State with the approval of the Commissioner of the Department of Administrative Services.

9.3. The Contract may be amended, by agreement of the parties, without further approval needed by the executive council if the price limitation is unchanged or decreased as a result of the new or deleted location.

10. CONTRACT AWARD:

10.1. The award shall be made to the Vendor(s) meeting the criteria established in this RFB and providing the lowest cost **per section**. The State reserves the right to reject any or all bids or any part thereof and add/delete items/locations to the contract. All award(s) shall be, in the form of a State of New Hampshire Contract(s).

10.2. Successful Vendor shall not be allowed to require any other type of order, nor shall the successful Vendor be allowed to require the filling out or signing of any other document by State of New Hampshire personnel.

11. NOTIFICATION AND AWARD OF CONTRACT(S):

11.1. Bid results shall not be given by telephone. For Vendors wishing to attend the bid closing, the names of the vendors submitting responses and pricing shall be made public. Other specific response information shall not be given out. Bid results shall be made public after final approval of the contract(s).

11.2. Bid results may also be viewed on our website at https://apps.das.nh.gov/bidscontracts/bids.aspx.

11.3. For Vendors wishing to attend the bid closing: Names of the Vendors submitting responses and pricing shall be made public. In lieu of in person public bid openings the State shall conduct openings via electronic means until further notice.

12. LIABILITY:

12.1. The State shall not be held liable for any costs incurred by Vendors in the preparation of bids or for work performed prior to contract issuance.

13. PUBLIC DISCLOSURE OF BID OR PROPOSAL SUBMISSIONS:

Bidder Initials mp

Date 9/6/2024

13.1. Generally, the full contents of any proposal (including all materials submitted in connection with it, such as attachments, exhibits, addenda, and vendor presentations) become public information upon completion of final contract or purchase order negotiations with the selected vendor. Certain information concerning proposals, including but not limited to scoring, is generally available to the public even before this time, in accordance with the provisions of NH RSA 21-G:37.

13.2. Confidential, commercial, or financial information may be exempt from public disclosure under RSA 91-A:5, IV. Any and all information contained in or connected to a bid or proposal that a Bidder considers confidential shall be clearly designated in the following manner:

13.3. If the Bidder considers <u>any</u> portion of a submission confidential, they shall provide <u>a separate copy</u> of the full and complete document, fully redacting those portions by blacking them out and shall note on the applicable page or pages of the document that the redacted portion or portions are stamped or otherwise marked with the notation "confidential." Use of any other term or method, such as stating that a document or portion thereof is "proprietary", "not for public use", or "for client's use only", is *<u>not</u>* acceptable. In addition to providing an additional fully redacted copy of the bid submission to the person listed as the point of contact on Page one (1) of this document, the identified information considered to be confidential must be accompanied by a separate letter stating the rationale for each item designated as confidential. In other words, the letter must specifically state why and under what legal authority each redaction has been made. Submissions which do not conform to these instructions by failing to include a redacted copy (if required), by failing to include a letter specifying the rationale for each redaction, by failing to designate redactions in the manner required by these instructions, or by including redactions which are contrary to these instructions or operative law may be rejected by the State as not conforming to the requirements of the bid or proposal. Marking or designating an entire proposal, attachment, or section as confidential shall neither be accepted nor honored by the State. <u>Marking an entire bid, proposal, attachment, or full sections thereof confidential without taking into consideration the public's right to know shall neither be accepted nor honored by the State</u>.

13.4. Notwithstanding any provision of this request for submission to the contrary, proposed pricing shall be subject to public disclosure REGARDLESS of whether or not marked as confidential.

13.5. If a request is made to the State by any person or entity to view or receive copies of any portion of a proposal, the State will assess what information it believes is subject to release; notify the Bidder that the request has been made; indicate what, if any, portions of the proposal or related material shall be released; and notify the Bidder of the date it plans to release the materials. To halt the release of information by the State, a Bidder must initiate and provide to the State, prior to the date specified in the notice, a court action in the Superior Court of the State of New Hampshire, at its sole expense, seeking to enjoin the release of the requested information.

13.6. By submitting a proposal, Bidders acknowledge and agree that:

13.6.1. The State may disclose any and all portions of the proposal or related materials which are not marked as confidential and/or which have not been specifically explained in the letter to the person identified as the point of contact for this RFP;

13.6.2. The State is not obligated to comply with a Bidder's designations regarding confidentiality and must conduct an independent analysis to assess the confidentiality of the information submitted in your proposal; and

13.6.3. The State may, unless otherwise prohibited by court order, release the information on the date specified in the notice described above without any liability to a Bidder.

14. <u>TERMINATION:</u>

14.1. The State of New Hampshire shall have the right to terminate the contract at any time with a thirty (30) day written notice to the successful Vendor.

15. <u>VENDOR CERTIFICATIONS:</u> Please see one-time vendor certification in the 3M Attachments section.

15.1. All Vendors shall be duly registered with the NH Bureau of Purchase and Property as State of New Hampshire vendors. All Vendors that are corporations, limited liability companies, or other limited liability business entities (this excludes sole proprietors and general partnerships) shall be duly registered with the New Hampshire Secretary of State to conduct business in the State of New Hampshire.

15.2. <u>STATE OF NEW HAMPSHIRE VENDOR APPLICATION:</u> To be eligible for a contract award, a Vendor must have a completed Vendor Application Package on file with the NH Bureau of Purchase and Property.

Bidder Initials mp

Date 9/6/2024

See the following website for information on obtaining and filing the required forms (no fee: https://DAS.NH.Gov/Purchasing).

15.3. NEW HAMPSHIRE SECRETARY OF STATE REGISTRATION: To be eligible for a contract award, a Vendor that is a corporation, limited liability company, or other limited liability business entity (this excludes sole proprietors and general partnerships) must be registered to conduct business in the State of New Hampshire **AND** in good standing with the NH Secretary of State. Please visit the following website to find out more about the requirements for registration with the NH Secretary of State: https://sos.nh.gov/corporation-division/. Please see 3M's Attachments section of this Bid Response.

15.4. CONFIDENTIALITY & CRIMINAL RECORD: If Applicable, any employee or approved subcontractor of the Vendor who will be accessing or working with records of the State of New Hampshire shall be required to sign a Confidentiality and Non-Disclosure Agreement and a Release of Criminal Record Authorization Form. These forms shall be returned to the designated State agency prior to commencing any work.

15.5. CERTIFICATE OF INSURANCE: Prior to being awarded a contract the Vendor shall be required to submit proof of comprehensive general liability insurance coverage prior to performing any services for the State. The coverage shall insure against all claims of bodily injury, death, or property damage in amounts of not less than $1,000,000 per occurrence and $2,000,000 aggregate. Coverage shall also include State of New Hampshire workers' compensation insurance to the extent required by RSA Chapter 281-A. Please see 3M's Attachments section

16. BID PRICES:

16.1. Bid prices shall remain firm for the entire contract period and shall be in US dollars and shall include delivery and all other costs required by this bid invitation. Special charges, surcharges (including credit card transaction fees), or fuel charges of any kind (by whatever name) may not be added on at any time. Any and all charges shall be built into your bid price at the time of the bid. Unless otherwise specified, prices shall be F.O.B. DESTINATION, (included in the price bid), which means delivered to a state agency's receiving dock or other designated point as specified in this contract or subsequent purchase orders without additional charge. Shipments shall be made in order to arrive at the destination at a satisfactory time for unloading during receiving hours.

16.2. Per Administrative Rule 606.01(e) "if there is a discrepancy between the unit price and the extension price in a response to an RFP, RFB or RFQ, the unit price shall be binding upon the vendor".

16.3. Price decreases shall become effective immediately as they become effective to the general trade.

16.4. Updated Published Price List MUST be e-mailed to James.M.Poulin@DAS.NH.Gov.

17. AUDITS AND ACCOUNTING:

17.1. The successful Vendor shall allow representatives of the State of New Hampshire to have complete access to all records for the purpose of determining compliance with the terms and conditions of this bid invitation and in determining the award and for monitoring any resulting contract.

17.2. At intervals during the contract term, and prior to the termination of the contract, the successful Vendor may be required to provide a complete and accurate accounting of all products and quantities ordered by each agency and institution and by political sub-divisions and authorized non-profit organizations.

18. ACCOUNT REPRESENTATIVE:

18.1. The Contractor shall assign a dedicated account representative and a backup in their absence who will be responsible for the daily administration of this Contract. The account representative shall be familiar with all Contract requirements to ensure compliance with the terms of the Contract. The account representative shall respond by phone or email to Client Agency inquiries within 24 hours of initial contact or the next business day if after normal business hours. The account representative's responsibilities shall include but not be limited to:

18.1.1. Provide recommended process and productivity improvements related to potential cost savings to the State for consideration quarterly.

18.1.2. Provide information and product offerings to bring the latest industry ideas and trends to the State as applicable.

18.1.3. Provide training on the use of the Contractor's portal as needed with no charge to the State.

19. ESTIMATED USAGE:

Bidder Initials mp

Date 9/6/2024

19.1. The quantities indicated in the offer section of this bid invitation are an estimate only for the State of New Hampshire's annual requirements. These quantities are indicated for informational purposes only and shall not be considered minimum or guaranteed quantities; nor shall they be considered maximum quantities. These quantities **do not** include any eligible participant usage.

20. USAGE REPORTING:

20.1. The successful Vendor shall be required to submit a quarterly and annual usage report for analysis for each state agency or eligible participant. Reports are due no later than 30 days after each end of each calendar quarter to James Poulin at The Bureau of Procurement & Support Services and sent electronic to James.M.Poulin@DAS.NH.Gov. At a minimum, the Report shall include:

20.1.1. Contract Number

20.1.2. Utilizing Agency and Eligible Participant

20.1.3. Services/Products Purchased (showing the manufacturer, item, part number, and the final cost.)

20.1.4. Third-party sustainability certifications, environmental attributes, and documentation with respect to recycled content used in the manufacture, development and distribution process of goods and services sold. This report shall include but not be limited to:

20.1.4.1. Percentage of recycled materials contained within finished products

20.1.4.2. Percentage of waste recycled throughout the manufacturing process

20.1.4.3. Types and volume of packaging used for transport

20.1.4.4. Any associated material avoided and/or recycled as applicable under contract

20.1.4.5. A standardized reporting form will be provided after contract award

20.1.4.6. Green Certifications for each product sold

20.1.5. Total Cost of all Services/Products Purchased. Ability to sort by agency/eligible participant.

20.1.6. In Excel format

21. ESTABLISHMENT OF ACCOUNTS:

21.1. Each State of New Hampshire agency shall have its own individual customer account number. There may also be instances where divisions or bureaus within an agency will need their own individual customer account numbers. Should any State of New Hampshire agency place an order under the contract, the successful Vendor agrees to establish an account within three business days from the date the order is placed. However, there shall be no delay in any shipment; the agency shall receive the items ordered in accordance with the delivery time required under this bid invitation, as if an account already exists for the agency.

22. ELIGIBLE PARTICIPANTS:

22.1. Political sub-divisions (counties, cities, towns, school districts, special district or precinct, or any other governmental organization), or any nonprofit agency under the provisions of section 501c of the federal internal revenue code, are eligible to participate under this contract whenever said sub-division or nonprofit agency so desires. These entities are autonomous and may participate at their sole discretion. In doing so, they are entitled to the prices established under the contract. However, they are solely responsible for their association with the successful Vendor. The State of New Hampshire assumes no liability between the successful Vendor and any of these entities.

23. PAYMENT:

23.1. Payments shall be made via ACH or Procurement Card (P-card = Credit Card) unless otherwise specified by the state of New Hampshire. Use the following link to enroll with the State Treasury for ACH payments: https://www.nh.gov/treasury/state-vendors/index.htm. Eligible participants shall negotiate their own payment methods with the successful Vendor.

23.2. Payment shall not be due until 30 days after the invoice has been received at the agency business office or all items have been delivered, inspected, and accepted by the agency, whichever is later.

24. INVOICING:

24.1. Invoices shall be submitted to the corresponding State agency after completion of work/acceptance of delivery.

24.2. The Vendor shall track manufacturer discounts and/or rebates offered and provide a credit on the State's next invoice. The Vendor shall submit reports quarterly to James Poulin at James.M.Poulin@DAS.NH.Gov at the Bureau of Purchase and Property detailing manufacturer discounts and/or rebates paid out to the State.

Bidder Initials mp

Date 9/6/2024

24.3. The Vendor shall provide prompt payment discounts offered for invoice payments prior to the State's standard 30-day due date for payments. Orders $10,000.00 and above will receive a 0.50% discount off invoice.

Payment Time	Discount %
30 Days	Standard Payment Terms
Within 10 Days	0.25%
Within 5 Days	0.50%

25. VENDOR RESPONSIBILITY:

25.1. The successful Vendor shall be solely responsible for meeting all terms and conditions specified in the bid, and any resulting contract. All State of New Hampshire bid invitations and addenda to such bid invitations are advertised on our website at: https://apps.das.nh.gov/bidscontracts/bids.aspx. It is a prospective Vendor's responsibility to access our website to determine any bid invitation under which the Vendor desires to participate. It is also the Vendor's responsibility to access our website for any posted addenda. The website is updated several times per day; it is the responsibility of the prospective Vendor to access the website frequently to ensure that no bidding opportunity or addendum is overlooked. It is the prospective Vendor's responsibility to forward a signed copy of any addendum requiring the Vendor's signature to the Bureau of Purchase and Property with the bid response.

25.2. In preparation of a bid response, the prospective Vendor shall:

25.2.1. Provide pricing information as indicated in the "Offer" section; and

25.2.2. Provide all other information required for the bid response (if applicable); and

25.2.3. Complete the "Vendor Contact Information" section; and

25.2.4. Complete the company information on the "Transmittal Letter" page, and sign under penalty of unsworn falsification in the space provided on that page.

25.3. It is the responsibility of the Vendor to maintain this any awarded contract and New Hampshire Vendor Registration with up to date contact information. Contract specific contact information (Sales contact, Contractor contract manager, etc.) shall be sent to the State's Contracting Office listed in Box 1.9 of Form P-37. Additionally, all updates i.e., telephone numbers, contact names, email addresses, W9, tax identification numbers are required to be current through a formal electronic submission to the Bureau of Purchase and Property at: https://www.das.nh.gov/purchasing/vendorresources.aspx.

26. IF AWARDED A CONTRACT:

26.1. The successful Vendor shall complete the following sections if awarded a contract of the Agreement State of New Hampshire Form #P-37 see Appendix A (sample):

Section 1.3 Contractor Name
Section 1.4 Contractor Address
Section 1.11 Contractor Signature
Section 1.12 Name & Title of Contractor Signatory (if Vendor is not a sole proprietor)

26.1.1. Provide certificate of insurance indicating the coverage amounts required by Section 14 of the Form Number P-37.

26.1.2. Provide proof of sufficient workers' compensation insurance coverage or evidence of exemption from RSA Chapter 81-A.

26.1.3. If the successful Vendor is a corporation, limited liability company, or other limited liability business entity, then provide a certificate of good standing issued by the NH Secretary of State or, for a newly incorporated, formed, or registered entity, a copy of the appropriate registration document certified by the NH Secretary of State.

27. SPECIFICATION COMPLIANCE:

27.1. Vendor's offer shall meet or exceed the required specifications as written. The State of New Hampshire shall be the sole determining factor of what meets or exceeds the required specifications.

27.2. Unless otherwise specified by the Bureau of Purchase and Property in this bid invitation document, all equipment/items offered by the Vendor shall be new (and of the current model year, if applicable); shall not be used, rebuilt, refurbished; shall not have been used as demonstration equipment, and shall not have been placed anywhere for evaluation purposes.

Bidder Initials mp
Date 9/6/2024

27.3. The manufacturer(s) and/or model(s) indicated in this bid are equivalent to the type and quality required. You may bid different make(s) and model(s); however, your offer shall match or exceed the one(s) indicated and you shall demonstrate to the satisfaction of the purchasing Agency that they meet or exceed the minimum standards. Items that do not meet the minimum standards shall not be accepted. Product literature and specifications may be enclosed.

28. SPECIFICATIONS:

28.1. Complete specifications required are detailed in the **SCOPE OF WORK** section of this bid invitation. In responding to the bid invitation, the prospective Vendor shall address all requirements for information as outlined herein.

29. CATALOGS/PRICE LISTS:

29.1. All bidders must submit an appropriate catalog and price list for all groups they are bidding. Successful vendor(s) will supply appropriate catalogs and price lists to agencies that request them. The successful vendor shall furnish a master price list indicating the manufacturers' part number, description, size and price per roll, using the awarded prices.

30. SCOPE OF WORK:

30.1. Vendor shall supply all labor, tools, transportation, materials, equipment and permits as necessary and required to perform services as described herein.

30.2. Make deliveries in accordance with the delivery days and timeframes set forth herein, except on holidays or at other times when the State is closed, including, but not limited to, inclement weather. All references to the time of day are Eastern Time (ET).

30.3. Delivery shall be made as ordered and in accordance with the terms specified herein. Unless otherwise specified by the State in writing, delivery shall be to a loading dock or receiving platform. The Contractor or Contractor's shipping designee shall be responsible for removal of product from the carrier and placement on the State loading dock or receiving platform. The State receiving personnel are not required to assist in this process. Reasonable compliance with delivery terms shall be final and binding and the burden of proof of proper receipt of the order shall rest with the Contractor.

30.4. Label, package, and palletize all orders in accordance with industry standard to ensure safe handling and proper and timely delivery. If a shipment is not on pallets or properly palletized at the time of delivery, the Contractor shall be responsible to palletize all products at the delivery Site. Contractor shall pick up all empty pallets on the next scheduled delivery day.

30.5. **Section 1 Specifications of Offer sheet:**

30.5.1. To ensure compatibility of materials used for traffic signs, all materials furnished in Section A shall be from a single manufacturer.

30.5.2. Materials shall be available in manufacturer's standard roll widths, at a minimum including 12, 18, 24, 30, 36, and 48-inch nominal widths.

30.6. Roll Goods

30.6.1. When supplied as roll goods, the sheeting and overlay film shall be of good appearance, free from ragged edges, cracks and extraneous materials. The maximum number of splices in each roll shall be three per 50 yards of material. Splices shall be butted. The materials shall be packed snugly in corrugated fiberboard cartons, in accordance with commercially accepted standards. Each carton shall clearly stipulate the brand, quantity, size, lot or run number, and color. Stored under normal conditions the sheeting and overlay film as furnished shall be suitable for use for a minimum shelf life period of one year.

30.7. Materials of Item 1A shall comply with ASTM D4956 Type I and shall have manufacturer's standard warranty.

30.8. Materials of Items 2A through 1G shall comply ASTM D4956 for the respective Type, shall meet the following Certification and Warranty Requirements, and (except for Item 1G) shall be listed on NHDOT's Qualified Products List as of the date bids are closed:

30.8.1. Certification: the sheeting manufacturer shall submit with each lot or shipment, a certification stating that the material supplied will meet all the specifications noted within and all the requirements listed herein.

Bidder Initials mp

Date 9/6/2024

30.8.2. Sheeting shall have a full manufacturer's warranty of at least 7 years and a partial manufacturer's warranty from the end of the full manufacturer's warranty period to at least 10 years, except for orange sheeting, which shall have at least a 3-year full warranty. The full warranty shall cover sign replacement including materials and labor. Partial warranty shall cover the supply of replacement sheeting only.

30.8.3. Warranty on sheeting shall cover the loss of colorfastness, cracking, and any other conditions inherent to the sheeting, including inks and overlay film that causes it to be ineffective in providing the direction to the motorists as intended. Warranty shall also cover the loss of retro reflectivity to below 80% of the initial minimum values listed in ASTM D4956 for the appropriate sheeting type during the full warranty period and to below 70% of the values during the partial warranty period.

30.8.4. Agency obligation: the using agency shall be responsible for dating all the signs at the time of application of sheeting. That date constitutes the start of the certification and performance requirements.

30.9. Washers, to protect the sign surface from damage by bolts or other fasteners shall be supplied at no charge.

30.10. For a given sheeting type (Item), all colors will be at the same price, unless where noted for fluorescent colors.

30.11. Screen inks, process colors, toners, clears and slip sheeting shall be specifically formulated for use with the sheeting in Section 1 and shall be supplied at no charge

30.11.1. Additional Specification for Item 1F/G – Overlay Films for use with Retroreflective Sheeting

30.11.1.1. General Characteristics – When prepared and fabricated in accordance with the manufacturer's recommendations, a finished sign face made of Overlay film and retroreflective sheeting, shall comply with the appearance, specification, and good workmanship designated by the using agency for sign faces constructed of colored retroreflective sheeting of the same type.

30.11.1.2. Instruction and Training. The vendor supplying the Overlay film requirement shall provide the services of a manufacturer's qualified technician for instruction and training at up to three state agency sign manufacturing facilities supplied by this contract. This instruction shall be available on a quarterly basis if needed at no additional cost, and shall include but not be limited to, training films, demonstration of material application, equipment operation, packaging, storage and other proven sign shop practices as they apply to the overlay film supplied by the vendor, and to assure that the resulting signs can comply with the applicable specifications.

30.12. All orders shall be inspected and accepted by the State authorized representative by signing and dating the Contractor's delivery ticket. Delivery ticket must include date of delivery, location of delivery, itemized by product description, product number, and quantity delivered at a minimum.

30.13. Unless otherwise specified herein, all services/deliveries performed under this Contract(s) shall be performed between the hours of 8:00 A.M. and 4:00 P.M. for State business days, unless other arrangements are made in advance with the State. Any deviation in work hours shall be pre-approved by the Contracting Officer. The State requires ten-day advance knowledge of said work schedules to provide security and access to respective work areas. No premium charges shall be paid for any off-hour work.

30.14. The Vendor or their personnel shall not represent themselves as employees or agents of the State.

30.15. While on State property, employees shall be subject to the control of the State, but under no circumstances shall such persons be deemed to be employees of the State.

30.16. All personnel shall observe all regulations or special restrictions in effect at the State Agency.

30.17. The Vendor's personnel shall be allowed only in areas where services are being performed. The use of State telephones is prohibited.

30.18. If **sub-contractors** are to be utilized, please include information regarding the proposed sub-contractors including the name of the company, their address, contact person and three references for clients they are currently servicing. Approval by the State must be received prior to a sub-contractor starting any work.

31. WARRANTY REQUIREMENTS:

Bidder Initials mp

Date 9/6/2024

31.1. The successful Vendor shall be required to provide warranties on all equipment provided by the Vendor for a period of not less than one (1) year or the manufacturer's standard warranty period, whichever is greater, commencing on the date that the equipment is received, inspected, and accepted by the State of New Hampshire. The warranty shall cover 100% of repair or replacement costs, including all parts, shipping, labor, travel, lodging, and expenses.

32. OBLIGATIONS AND LIABILITY OF THE VENDOR:

32.1. The successful Vendor shall perform all work and furnish all materials, tools, equipment and safety devices necessary to perform the requested services in the manner and within the time hereinafter specified. The Vendor shall provide said services to the satisfaction of the State and in accordance with the specifications and at the price set forth herein. All work to be performed and all equipment to be furnished pursuant to the Scope of Services included herein shall be performed and furnished in strict accordance with the specifications included herein, the terms of any contract awarded as a result of this solicitation, any associated contract drawings, and the directions of State representatives as may be given from time to time while the work is in progress.

32.2. The successful Vendor shall take full responsibility for the work to be performed pursuant to the Scope of Work included herein; for the protection of said work; and for preventing injuries to persons and damage to property and utilities on or about said work. The Vendor shall in no way be relieved of such responsibility by any authority of the State to give permission or issue orders relating to any part of the work, by any such permission given or orders issued, or by any failure of the State to give such permission or issue such orders. The successful Vendor shall bear all losses accruing to the Vendor as a result of the amount, quality, or character of the work required, or because the nature or characteristics of the work location is different from what the Vendor estimated or expected, or due to delays or other complications caused by the weather, elements, or other natural causes.

32.3. The successful Vendor agrees that any damage or injury to any buildings, materials, equipment, or other property resulting from the Vendor's performance of the requested services shall be repaired at the Vendor's own expense so that such buildings, materials, equipment, or other property are satisfactorily restored to their prior condition.

33. NON-EXCLUSIVE CONTRACT:

33.1. Any resulting Contract from this RFB will be a non-exclusive Contract. The State reserves the right, at its discretion, to retain other Contractors to provide any of the Services or Deliverables identified under this procurement or make an award by item, part or portion of an item, group of items, or total Proposal.

34. RECALLS:

34.1. Contractor shall have the ability to track all products ordered and delivered. The Contractor shall have a product recall program that provides for notification within twenty-four (24) hours of the recall to the State which has received the recalled products. The Contractor shall pick up and replace all products that are subject to the recall at no additional cost to the State. Recalled products that are returned shall be credited on the next invoice.

35. SAMPLE PRODUCTS FOR EVALUATION:

35.1. All products offered under this contract may be selected by the State at any time, prior to or throughout the term of the contract, to provide for examination and testing. Samples shall be clearly labeled as to the contents and supplier. Samples submitted shall be the same product to be delivered under this contract. All samples must be provided at no charge to the State.

36. RETURNED GOODS:

36.1. The successful Vendor shall resolve all order and invoice discrepancies within five (5) business days from notification. Products returned due to quality issues, duplicate shipments, over-shipments, etc. shall be picked up by the successful Vendor within ten (10) business days of notification with no restocking or freight charges and shall be replaced with specified products or the agency shall be refunded/credited for the full purchase price. Unauthorized substitutions for any products are not allowed.

36.2. Standard stock products ordered in error by the State of New Hampshire shall be returned for full credit within fifteen (15) business days of receipt. Products shall be in re-saleable condition (original container, unused) and there shall be no restocking fee charged for these products. The using agency shall be responsible for any freight charges to return these items to the successful Vendor.

Bidder Initials mp

Date 9/6/2024

37. BACKORDERS AND SUBSTITUTIONS:

37.1. The Contractor shall maintain adequate inventory levels to avoid out-of-stock situations. Any out-of-stock products must be communicated to the requestor within 24 hours of the placement of the order. No substitutions shall be made without the written consent of the State.

37.2. Items ordered but not delivered in error by the Contractor shall be credited on the next invoice or products delivered at a later date as mutually agreed upon in writing.

37.3. The Contractor shall notify the State Contracting Officer of any items no longer available and provide a recommended replacement.

38. ENVIRONMENTALLY FRIENDLY PRODUCTS: Please refer to 3M's Qualifications and Explanations in the 3M Attachment section of this bid response

38.1. In accordance with State of New Hampshire RSA 9-C, the Bureau of Purchase and Property has an obligation to put into practice the interdependent principles of waste reduction, recycling, and recycled products purchasing. Contractors should supply environmentally preferable materials that meet performance requirements wherever practical in the fulfillment of this regulation. Environmentally preferable products and services have characteristics that include, but are not limited to, the following:

38.1.1. Energy or water efficient

38.1.2. Reusable

38.1.3. Recyclable

38.1.4. Contains postconsumer recycled materials

38.1.5. Produces fewer polluting byproducts or safety hazards during manufacture, use, or disposal

38.1.6. Certified by an independent, third-party eco-label (e.g., Green Seal, EcoLogo, etc.)

38.2. Suppliers citing environmentally preferred product claims shall follow the Federal Trade Commission's Green Marketing Guidelines and provide proper certification or detailed information on environmental benefits, durability, and recyclable properties as an **attachment with their bid submission**.

38.3. Whenever possible, Contractors shall eliminate PVC or polystyrene due to environmental and human health concerns. Contractors must notify the State if a product contains mercury and/or PFAS.

38.4. To promote fuel efficiency and reduce greenhouse gases and air pollution, Contractors are encouraged to use a SmartWay Transport/Carrier Partner for the shipment or transport of products. A list of SmartWay Transport partners can be found here: *https://www.epa.gov/smartway/smartway-partner-list*.

39. OFFER:

39.1. The bidder offers to sell to the state of New Hampshire the commodities or services indicated at the price or prices quoted and in compliance with the requirements and specifications of the bid. Quotes in lieu of a completed offer sheet will not be accepted.

39.2. OFFER SHEET WILL BE ATTACHMENT 1 (SEPARATE FROM THIS DOCUMENT).

40. VENDOR'S BALANCE OF PRODUCT LINE ITEMS:

40.1. The items in the Offer Section include the items most commonly purchased by State of New Hampshire agencies and shall be used for award purposes. During the term of contract, the State may purchase other items that relate to the product/categories represented herein from the successful Vendor's Balance of Product Line. All items ordered shall include all shipping/charges as specified above in "Bid Prices".

41. VENDOR CONTACT INFORMATION:

41.1. Please provide contact information below for a person knowledgeable of and who can answer questions regarding this bid response.

Joy Stahosky	651-381-2837	1-800-553-1380
Contact Person	Local Telephone Number	Toll Free Telephone Number
jlstahosky@mmm.com	www.mmm.com	
E-mail Address	Company Website	
3M Company	3M Center, 223-3W-33, St. Paul, MN 55144-1000	
Vendor Company Name	Vendor Address	

Bidder Initials mp

Date 9/6/2024

42. DELIVERY TIME: Please refer to 3M's Qualifications and Explanations in the 3M Attachments section.

42.1. The successful Vendor shall be required to accomplish delivery of any item ordered under the contract within five (5) business days from the placement of the order.

42.2. The use of a private carrier to make delivery **does not** relieve the successful Vendor from the responsibility of meeting the delivery requirement.

43. DELIVERY LOCATIONS:

43.1. The following are the current State of New Hampshire agency/institution locations which, if you are awarded a contract, you are expected to service. The State of New Hampshire reserves the right to add locations to this list at the contract prices or to delete locations, as needed. This listing does not include any eligible participants.

44. ATTACHMENTS:

44.1. The following attachments are an integral part of this bid invitation:

44.1.1. Attachment 1: Offer Sheet

45. NOTE: TO BE CONSIDERED, BID TRANSMITTAL LETTER SHALL BE SIGNED IN THE SPACE PROVIDED.

46. THE BID OPENING IS OPEN TO THE PUBLIC ONLINE AT THE FOLLOWING:

Microsoft Teams Need help?
Join the meeting now
Meeting ID: 293 730 797 281
Passcode: LSJLcG

Dial in by phone
+1 603-931-4944,,65426843# United States, Concord
Find a local number
Phone conference ID: 654 268 43#
Join on a video conferencing device
Tenant key: nhgov@m.webex.com
Video ID: 116 650 719 7
More info

Bidder Initials mp
Date 9/6/2024

APPENDIX A

SAMPLE FORM TO BE COMPLETED UPON AWARD

FORM NUMBER P-37 (version 2/23/2023)

Notice: This agreement and all of its attachments shall become public upon submission to Governor and Executive Council for approval. Any information that is private, confidential or proprietary must be clearly identified to the agency and agreed to in writing prior to signing the contract.

AGREEMENT

The State of New Hampshire and the Contractor hereby mutually agree as follows:

GENERAL PROVISIONS

1. IDENTIFICATION.

1.1 State Agency Name		1.2 State Agency Address	
1.3 Contractor Name		1.4 Contractor Address	
1.5 Contractor Phone Number	1.6 Account Unit and Class	1.7 Completion Date	1.8 Price Limitation
1.9 Contracting Officer for State Agency		1.10 State Agency Telephone Number	
1.11 Contractor Signature Date:		1.12 Name and Title of Contractor Signatory	
1.13 State Agency Signature Date:		1.14 Name and Title of State Agency Signatory	
1.15 Approval by the N.H. Department of Administration, Division of Personnel *(if applicable)* By: Director, On:			
1.16 Approval by the Attorney General (Form, Substance and Execution) *(if applicable)* By: On:			
1.17 Approval by the Governor and Executive Council *(if applicable)* G&C Item number: G&C Meeting Date:			

Bidder Initials mp

Date 9/6/2024

2. SERVICES TO BE PERFORMED. The State of New Hampshire, acting through the agency identified in block 1.1 ("State"), engages contractor identified in block 1.3 ("Contractor") to perform, and the Contractor shall perform, the work or sale of goods, or both, identified and more particularly described in the attached EXHIBIT B which is incorporated herein by reference ("Services").

3. EFFECTIVE DATE/COMPLETION OF SERVICES.

3.1 Notwithstanding any provision of this Agreement to the contrary, and subject to the approval of the Governor and Executive Council of the State of New Hampshire, if applicable, this Agreement, and all obligations of the parties hereunder, shall become effective on the date the Governor and Executive Council approve this Agreement, unless no such approval is required, in which case the Agreement shall become effective on the date the Agreement is signed by the State Agency as shown in block 1.13 ("Effective Date").

3.2 If the Contractor commences the Services prior to the Effective Date, all Services performed by the Contractor prior to the Effective Date shall be performed at the sole risk of the Contractor, and in the event that this Agreement does not become effective, the State shall have no liability to the Contractor, including without limitation, any obligation to pay the Contractor for any costs incurred or Services performed.

3.3 Contractor must complete all Services by the Completion Date specified in block 1.7.

4. CONDITIONAL NATURE OF AGREEMENT.

Notwithstanding any provision of this Agreement to the contrary, all obligations of the State hereunder, including, without limitation, the continuance of payments hereunder, are contingent upon the availability and continued appropriation of funds. In no event shall the State be liable for any payments hereunder in excess of such available appropriated funds. In the event of a reduction or termination of appropriated funds by any state or federal legislative or executive action that reduces, eliminates or otherwise modifies the appropriation or availability of funding for this Agreement and the Scope for Services provided in EXHIBIT B, in whole or in part, the State shall have the right to withhold payment until such funds become available, if ever, and shall have the right to reduce or terminate the Services under this Agreement immediately upon giving the Contractor notice of such reduction or termination. The State shall not be required to transfer funds from any other account or source to the Account identified in block 1.6 in the event funds in that Account are reduced or unavailable.

5. CONTRACT PRICE/PRICE LIMITATION/ PAYMENT.

5.1 The contract price, method of payment, and terms of payment are identified and more particularly described in EXHIBIT C which is incorporated herein by reference.

5.2 Notwithstanding any provision in this Agreement to the contrary, and notwithstanding unexpected circumstances, in no event shall the total of all payments authorized, or actually made hereunder, exceed the Price Limitation set forth in block 1.8. The payment by the State of the contract price shall be the only, and the complete reimbursement to the Contractor for all expenses, of whatever nature incurred by the Contractor in the performance hereof, and shall be the only, and the complete compensation to the Contractor for the Services.

5.3 The State reserves the right to offset from any amounts otherwise payable to the Contractor under this Agreement those liquidated amounts required or permitted by N.H. RSA 80:7 through RSA 80:7-c or any other provision of law.

5.4 The State's liability under this Agreement shall be limited to monetary damages not to exceed the total fees paid. The Contractor agrees that it has an adequate remedy at law for any breach of this Agreement by the State and hereby waives any right to specific performance or other equitable remedies against the State.

6. COMPLIANCE BY CONTRACTOR WITH LAWS AND REGULATIONS/EQUAL EMPLOYMENT OPPORTUNITY.

6.1 In connection with the performance of the Services, the Contractor shall comply with all applicable statutes, laws, regulations, and orders of federal, state, county or municipal authorities which impose any obligation or duty upon the Contractor, including, but not limited to, civil rights and equal employment opportunity laws and the Governor's order on Respect and Civility in the Workplace, Executive order 2020-01. In addition, if this Agreement is funded in any part by monies of the United States, the Contractor shall comply with all federal executive orders, rules, regulations and statutes, and with any rules, regulations and guidelines as the State or the United States issue to implement these regulations. The Contractor shall also comply with all applicable intellectual property laws.

6.2 During the term of this Agreement, the Contractor shall not discriminate against employees or applicants for employment because of age, sex, sexual orientation, race, color, marital status, physical or mental disability, religious creed, national origin, gender identity, or gender expression, and will take affirmative action to prevent such discrimination, unless exempt by state or federal law. The Contractor shall ensure any subcontractors comply with these nondiscrimination requirements.

6.3 No payments or transfers of value by Contractor or its representatives in connection with this Agreement have or shall be made which have the purpose or effect of public or commercial bribery, or acceptance of or acquiescence in extortion, kickbacks, or other unlawful or improper means of obtaining business.

6.4. The Contractor agrees to permit the State or United States access to any of the Contractor's books, records and accounts for the purpose of ascertaining compliance with this Agreement and all rules, regulations and orders pertaining to the covenants, terms and conditions of this Agreement.

7. PERSONNEL.

7.1 The Contractor shall at its own expense provide all personnel necessary to perform the Services. The Contractor warrants that all personnel engaged in the Services shall be qualified to perform the Services, and shall be properly licensed and otherwise authorized to do so under all applicable laws.

7.2 The Contracting Officer specified in block 1.9, or any successor, shall be the State's point of contact pertaining to this Agreement.

8. EVENT OF DEFAULT/REMEDIES.

8.1 Any one or more of the following acts or omissions of the Contractor shall constitute an event of default hereunder ("Event of Default"):

8.1.1 failure to perform the Services satisfactorily or on schedule;

8.1.2 failure to submit any report required hereunder; and/or

8.1.3 failure to perform any other covenant, term or condition of this Agreement.

8.2 Upon the occurrence of any Event of Default, the State may take any one, or more, or all, of the following actions:

8.2.1 give the Contractor a written notice specifying the Event of Default and requiring it to be remedied within, in the absence of a greater or lesser specification of time, thirty (30) calendar days from the date of the notice; and if the Event of Default is not timely cured, terminate this Agreement, effective two (2) calendar days after giving the Contractor notice of termination;

8.2.2 give the Contractor a written notice specifying the Event of Default and suspending all payments to be made under this Agreement and ordering that the portion of the contract price which would otherwise accrue to the Contractor during the period from the date of such notice until such time as the State determines that the Contractor has cured the Event of Default shall never be paid to the Contractor;

8.2.3 give the Contractor a written notice specifying the Event of Default and set off against any other obligations the State may owe to the Contractor any damages the State suffers by reason of any Event of Default; and/or

8.2.4 give the Contractor a written notice specifying the Event of Default, treat the Agreement as breached, terminate the Agreement and pursue any of its remedies at law or in equity, or both.

9. TERMINATION.

9.1 Notwithstanding paragraph 8, the State may, at its sole discretion, terminate the Agreement for any reason, in whole or in part, by thirty (30) calendar days written notice to the Contractor that the State is exercising its option to terminate the Agreement.

9.2 In the event of an early termination of this Agreement for any reason other than the completion of the Services, the Contractor shall, at the State's discretion, deliver to the Contracting Officer, not later than fifteen (15) calendar days after the date of termination, a report ("Termination Report") describing in detail all Services performed, and the contract price earned, to and including the date of termination. In addition, at the State's discretion, the Contractor shall, within fifteen (15) calendar days of notice of early termination, develop and submit to the State a transition plan for Services under the Agreement.

10. PROPERTY OWNERSHIP/DISCLOSURE.

10.1 As used in this Agreement, the word "Property" shall mean all data, information and things developed or obtained during the performance of, or acquired or developed by reason of, this Agreement, including, but not limited to, all studies, reports, files, formulae, surveys, maps, charts, sound recordings, video recordings, pictorial reproductions, drawings, analyses, graphic representations, computer programs, computer printouts, notes, letters, memoranda, papers, and documents, all whether finished or unfinished.

10.2 All data and any Property which has been received from the State, or purchased with funds provided for that purpose under this Agreement, shall be the property of the State, and shall be returned to the State upon demand or upon termination of this Agreement for any reason.

Bidder Initials mp

Date 9/6/2024

10.3 Disclosure of data, information and other records shall be governed by N.H. RSA chapter 91-A and/or other applicable law. Disclosure requires prior written approval of the State.

11. CONTRACTOR'S RELATION TO THE STATE. In the performance of this Agreement the Contractor is in all respects an independent contractor, and is neither an agent nor an employee of the State. Neither the Contractor nor any of its officers, employees, agents or members shall have authority to bind the State or receive any benefits, workers' compensation or other emoluments provided by the State to its employees.

12. ASSIGNMENT/DELEGATION/SUBCONTRACTS.
12.1 Contractor shall provide the State written notice at least fifteen (15) calendar days before any proposed assignment, delegation, or other transfer of any interest in this Agreement. No such assignment, delegation, or other transfer shall be effective without the written consent of the State.
12.2 For purposes of paragraph 12, a Change of Control shall constitute assignment. "Change of Control" means (a) merger, consolidation, or a transaction or series of related transactions in which a third party, together with its affiliates, becomes the direct or indirect owner of fifty percent (50%) or more of the voting shares or similar equity interests, or combined voting power of the Contractor, or (b) the sale of all or substantially all of the assets of the Contractor.
12.3 None of the Services shall be subcontracted by the Contractor without prior written notice and consent of the State.
12.4 The State is entitled to copies of all subcontracts and assignment agreements and shall not be bound by any provisions contained in a subcontract or an assignment agreement to which it is not a party.

13. INDEMNIFICATION. The Contractor shall indemnify, defend, and hold harmless the State, its officers, and employees from and against all actions, claims, damages, demands, judgments, fines, liabilities, losses, and other expenses, including, without limitation, reasonable attorneys' fees, arising out of or relating to this Agreement directly or indirectly arising from death, personal injury, property damage, intellectual property infringement, or other claims asserted against the State, its officers, or employees caused by the acts or omissions of negligence, reckless or willful misconduct, or fraud by the Contractor, its employees, agents, or subcontractors. The State shall not be liable for any costs incurred by the Contractor arising under this paragraph 13. Notwithstanding the foregoing, nothing herein contained shall be deemed to constitute a waiver of the State's sovereign immunity, which immunity is hereby reserved to the State. This covenant in paragraph 13 shall survive the termination of this Agreement.

14. INSURANCE.
14.1 The Contractor shall, at its sole expense, obtain and continuously maintain in force, and shall require any subcontractor or assignee to obtain and maintain in force, the following insurance:
14.1.1 commercial general liability insurance against all claims of bodily injury, death or property damage, in amounts of not less than $1,000,000 per occurrence and $2,000,000 aggregate or excess; and
14.1.2 special cause of loss coverage form covering all Property subject to subparagraph 10.2 herein, in an amount not less than 80% of the whole replacement value of the Property.
14.2 The policies described in subparagraph 14.1 herein shall be on policy forms and endorsements approved for use in the State of New Hampshire by the N.H. Department of Insurance, and issued by insurers licensed in the State of New Hampshire.
14.3 The Contractor shall furnish to the Contracting Officer identified in block 1.9, or any successor, a certificate(s) of insurance for all insurance required under this Agreement. At the request of the Contracting Officer, or any successor, the Contractor shall provide certificate(s) of insurance for all renewal(s) of insurance required under this Agreement. The certificate(s) of insurance and any renewals thereof shall be attached and are incorporated herein by reference.

15. WORKERS' COMPENSATION.
15.1 By signing this agreement, the Contractor agrees, certifies and warrants that the Contractor is in compliance with or exempt from, the requirements of N.H. RSA chapter 281-A *("Workers' Compensation")*.
15.2 To the extent the Contractor is subject to the requirements of N.H. RSA chapter 281-A, Contractor shall maintain, and require any subcontractor or assignee, to secure and maintain, payment of Workers' Compensation in connection with activities which the person proposes to undertake pursuant to this Agreement. The Contractor shall furnish the Contracting Officer identified in block 1.9, or any successor, proof of Workers' Compensation in the manner described in N.H. RSA chapter 281-A and any applicable renewal(s) thereof, which shall be attached and are incorporated herein by reference. The State shall not be responsible for payment of any Workers' Compensation premiums or for any other claim or benefit for Contractor, or any subcontractor or employee of Contractor, which might arise under applicable State of New Hampshire Workers' Compensation laws in connection with the performance of the Services under this Agreement.

16. WAIVER OF BREACH. A State's failure to enforce its rights with respect to any single or continuing breach of this Agreement shall not act as a waiver of the right of the State to later enforce any such rights or to enforce any other or any subsequent breach.

17. NOTICE. Any notice by a party hereto to the other party shall be deemed to have been duly delivered or given at the time of mailing by certified mail, postage prepaid, in a United States Post Office addressed to the parties at the addresses given in blocks 1.2 and 1.4, herein.

18. AMENDMENT. This Agreement may be amended, waived or discharged only by an instrument in writing signed by the parties hereto and only after approval of such amendment, waiver or discharge by the Governor and Executive Council of the State of New Hampshire unless no such approval is required under the circumstances pursuant to State law, rule or policy.

19. CHOICE OF LAW AND FORUM.
19.1 This Agreement shall be governed, interpreted and construed in accordance with the laws of the State of New Hampshire except where the Federal supremacy clause requires otherwise. The wording used in this Agreement is the wording chosen by the parties to express their mutual intent, and no rule of construction shall be applied against or in favor of any party.
19.2 Any actions arising out of this Agreement, including the breach or alleged breach thereof, may not be submitted to binding arbitration, but must, instead, be brought and maintained in the Merrimack County Superior Court of New Hampshire which shall have exclusive jurisdiction thereof.

20. CONFLICTING TERMS. In the event of a conflict between the terms of this P-37 form (as modified in EXHIBIT A) and any other portion of this Agreement including any attachments thereto, the terms of the P-37 (as modified in EXHIBIT A) shall control.

21. THIRD PARTIES. This Agreement is being entered into for the sole benefit of the parties hereto, and nothing herein, express or implied, is intended to or will confer any legal or equitable right, benefit, or remedy of any nature upon any other person.

22. HEADINGS. The headings throughout the Agreement are for reference purposes only, and the words contained therein shall in no way be held to explain, modify, amplify or aid in the interpretation, construction or meaning of the provisions of this Agreement.

23. SPECIAL PROVISIONS. Additional or modifying provisions set forth in the attached EXHIBIT A are incorporated herein by reference.

24. FURTHER ASSURANCES. The Contractor, along with its agents and affiliates, shall, at its own cost and expense, execute any additional documents and take such further actions as may be reasonably required to carry out the provisions of this Agreement and give effect to the transactions contemplated hereby.

25. SEVERABILITY. In the event any of the provisions of this Agreement are held by a court of competent jurisdiction to be contrary to any state or federal law, the remaining provisions of this Agreement will remain in full force and effect.

26. ENTIRE AGREEMENT. This Agreement, which may be executed in a number of counterparts, each of which shall be deemed an original, constitutes the entire agreement and understanding between the parties, and supersedes all prior agreements and understandings with respect to the subject matter hereof.

Bidder Initials mp
Date 9/6/2024

STATE OF NEW HAMPSHIRE TRANSMITTAL LETTER

Date: 9/6/2024

Company Name: 3M Company

Address: 3M Center, 223-3W-33, St. Paul, MN 55144-1000

To: Point of Contact: **James Poulin**
Telephone: **(603)-271-7605**
Email: **NH.Purchasing@das.nh.gov**

RE: Bid Invitation Name: **Retroreflective and Non-reflective Sheeting**
Bid Number: **2954-25**
Bid Posted Date (on or by): **8/20/2024**
Bid Closing Date and Time: **9/9/2024 9:00 AM (Eastern Time)**
Dear **James Poulin,**

[Insert name of signor] Maria Paraschou, on behalf of 3M Company [insert name of entity submitting bid (collectively referred to as "Vendor") hereby submits an offer as contained in the written bid submitted herewith ("Bid") to the State of New Hampshire in response to BID # 2954-25 for Retroreflective and Non-reflective Sheeting at the price(s) quoted herein in complete accordance with the bid.

Vendor attests to the fact that:

1. The Vendor has reviewed and agreed to be bound by the Bid.
2. The Vendor has not altered any of the language or other provisions contained in the Bid document.
3. The Bid is effective for a period of 180 days from the Bid Closing date as indicated above.
4. The prices Vendor has quoted in the Bid were established without collusion with other vendors.
5. The Vendor has read and fully understands this Bid.
6. Further, in accordance with RSA 21-I:11-c, the undersigned Vendor certifies that neither the Vendor nor any of its subsidiaries, affiliates or principal officers (principal officers refers to individuals with management responsibility for the entity or association):
   a. Has, within the past 2 years, been convicted of, or pleaded guilty to, a violation of RSA 356:2, RSA 356:4, or any state or federal law or county or municipal ordinance prohibiting specified bidding practices, or involving antitrust violations, which has not been annulled;
   b. Has been prohibited, either permanently or temporarily, from participating in any public works project pursuant to RSA 638:20;
   c. Has previously provided false, deceptive, or fraudulent information on a vendor code number application form, or any other document submitted to the state of New Hampshire, which information was not corrected as of the time of the filing a bid, proposal, or quotation;
   d. Is currently debarred from performing work on any project of the federal government or the government of any state;
   e. Has, within the past 2 years, failed to cure a default on any contract with the federal government or the government of any state;
   f. Is presently subject to any order of the department of labor, the department of employment security, or any other state department, agency, board, or commission, finding that the applicant is not in compliance with the requirements of the laws or rules that the department, agency, board, or commission is charged with implementing;
   g. Is presently subject to any sanction or penalty finally issued by the department of labor, the department of employment security, or any other state department, agency, board, or commission, which sanction or penalty has not been fully discharged or fulfilled;
   h. Is currently serving a sentence or is subject to a continuing or unfulfilled penalty for any crime or violation noted in this section;
   i. Has failed or neglected to advise the division of any conviction, plea of guilty, or finding relative to any crime or violation noted in this section, or of any debarment, within 30 days of such conviction, plea, finding, or debarment; or
   j. Has been placed on the debarred parties list described in RSA 21-I:11-c within the past year.

This document shall be signed by a person who is authorized to legally obligate the responding vendor. A signature on this document indicates that all State of New Hampshire terms and conditions are accepted by the responding vendor and that any and all other terms and conditions submitted by the responding vendor are null and void, even if such terms and conditions have terminology to the contrary. The responding vendor shall also be subject to State of New Hampshire terms and conditions as stated on the reverse of the purchase order.

Authorized Signor's Signature Maria Paraschou **Authorized Signor's Title** Sr. Proposal & Contract Manager

Type text here

Bidder Initials mp

Date 9/6/2024

STATE OF NEW HAMPSHIRE
DIVISION OF PROCUREMENT AND SUPPORT SERVICES

BUREAU OF PURCHASE AND PROPERTY
STATE HOUSE ANNEX
25 CAPITOL STREET
CONCORD, NEW HAMPSHIRE 03301-6398

Date of Change: August 23, 2024

ADDENDUM # 01 TO BID INVITATION 2954-25

DATE AND TIME OF BID CLOSING: 9/9/2024 9:00 AM

FOR: Retroreflective and Non-reflective Sheeting

Please see revised Attachment 1: Offer Sheet - Only updated offer sheets will be accepted.

Bid Currently Reads:

30.8 Materials of Items 2A through 1G shall comply ASTM D4956 for the respective Type, shall meet the following Certification and Warranty Requirements, and (except for Item 1G) shall be listed on NHDOT's Qualified Products List as of the date bids are closed:

Change Bid to Read:

30.8 Materials of **Items 1B** through 1G shall comply ASTM D4956 for the respective Type, shall meet the following Certification and Warranty Requirements, and (except for Item 1G) shall be listed on NHDOT's Qualified Products List as of the date bids are closed:

PURCHASING AGENT: JAMES POULIN
Email: NH.Purchasing@das.nh.gov

NOTE: ALL CHANGES TO BID SOLICITATION NOTED IN ADDENDUMS WILL SUPERSEDE PREVIOUSLY SUBMITTED DOCUMENTS AND MUST BE SUBMITTED WITH THE BID. ALL OTHER SPECIFICATIONS REMAIN UNCHANGED AND VALID.

RESPONDENT BUSINESS NAME: 3M Company

ADDRESS: 3M Center, 223-3W-33, St. Paul, MN 55144-1000

PRINT NAME: Maria Paraschou SIGNATURE: Maria Paraschou

TEL. NO. 651-381-2837 EMAIL ADDRESS: jlstahosky@mmm.com

Please visit: https://das.nh.gov/purchasing/vendorresources.aspx (click on "Bid and Proposals") for complete bid and addendums.

STATE OF NEW HAMPSHIRE
DIVISION OF PROCUREMENT AND SUPPORT SERVICES

BUREAU OF PURCHASE AND PROPERTY
STATE HOUSE ANNEX
25 CAPITOL STREET
CONCORD, NEW HAMPSHIRE 03301-6398

Date of Change: August 29, 2024

ADDENDUM # 02 TO BID INVITATION 2954-25

DATE AND TIME OF BID CLOSING: 9/9/2024 9:00 AM

FOR: Retroreflective and Non-reflective Sheeting

Question 1: Request for Bid Document Page 10: 30.11.1.2 Please confirm that any instruction and training can be done remotely.
State Response: Training can be completed remotely.

Question 2: Request for Bid Document Page 13: 42.1 Requesting that delivery of any standard item ordered to be 15 days after receipt of order.
State Response: The State will accept this change to 15 days after receipt of order.

1.1. **BID CURRENTLY READS:** The successful Vendor shall be required to accomplish delivery of any item ordered under the contract within five (5) business days from the placement of the order.

1.2. **CHANGE BID TO READ:** The successful Vendor shall be required to accomplish delivery of any item ordered under the contract within **fifteen (15) business days** from the placement of the order.

Question 3: Offer Sheet Are we required to bid all sections 1 – 4?
State Response: You do not have to bid on every section, if bidding on a section, you must bid on all items of that specific section.

Question 4: Requesting equivalency
State Response: This bid is accepting equivalency to the products listed. Please submit your data sheets with your bids accordingly.

PURCHASING AGENT: JAMES POULIN
Email: NH.Purchasing@das.nh.gov

NOTE: ALL CHANGES TO BID SOLICITATION NOTED IN ADDENDUMS WILL SUPERSEDE PREVIOUSLY SUBMITTED DOCUMENTS AND MUST BE SUBMITTED WITH THE BID. ALL OTHER SPECIFICATIONS REMAIN UNCHANGED AND VALID.

RESPONDENT BUSINESS NAME: 3M Company

ADDRESS: 3M Center, 223-3W-33, St. Paul, MN 55144-1000

PRINT NAME: Maria Paraschou SIGNATURE: Maria Paraschou

TEL. NO. 651-381-2837 EMAIL ADDRESS: jlstahosky@mmm.com

Please visit: https://das.nh.gov/purchasing/vendorresources.aspx (click on "Bid and Proposals") for complete bid and addendums.

STATE OF NEW HAMPSHIRE
DIVISION OF PROCUREMENT AND SUPPORT SERVICES

BUREAU OF PURCHASE AND PROPERTY
STATE HOUSE ANNEX
25 CAPITOL STREET
CONCORD, NEW HAMPSHIRE 03301-6398

Date of Change: September 3, 2024

ADDENDUM # 03 TO BID INVITATION 2954-25

DATE AND TIME OF BID CLOSING: 9/9/2024 9:00 AM

FOR: Retroreflective and Non-reflective Sheeting

Question 1: Section 29. CATALOGS/PRICE LISTS (page 9). As a prospective vendor, our company is unable to submit catalogs. price lists, and a master price list to requesting agencies as stated. Alternatively, our company is able to provide with our bid submittal manufacturers' part numbers, product descriptions, sizes and prices per roll. Would the State regard this alternative as acceptable to meet this requirement?
State Response: The State will accept this as meeting the requirement for price lists.

Question 2: Section 30.8.1. Certification (page 9). As a prospective vendor, our company is unable to provide this certification with each shipment. Alternatively, will the State accept a modification to this requirement with one-time certifications from bidders in their bid submittals stating, "Bidder material supplied will meet all bid specifications and requirements herein."
State Response: The State will accept a one-time certification with this bid for the use of contract.

Question 3: Section 38. ENVIRONMENTALLY FRIENDLY PRODUCTS (page 12). As a prospective vendor, our offer includes products that contain polyfluoroalkyl substance (PFAS). Therefore, our offer is contingent upon the acceptance of the following contract clause. Please advise if the State will accept and incorporate the following clause?

The Parties acknowledge [Supplier] has announced it will exit per- and polyfluoroalkyl substance (PFAS) manufacturing by the end of 2025 and work to discontinue the use of PFAS across its product portfolio by the end of 2025. The Parties further acknowledge that one or more [Product / Good] sold under this Agreement utilizes PFAS ("PFAS-Related Product"). As this Agreement's underlying Term extends beyond December 31, 2025, and/or any renewal or extension option of the Agreement has the potential to extend the Agreement beyond December 31, 2025, the Parties acknowledge and agree Supplier shall have the unilateral right to either:

1. substitute the PFAS-Related Product(s) with a product that is not PFAS-Related Product (alternate product), with the timing of such alternate product at Supplier's election, or

2. terminate this Agreement as to the PFAS-Related Product(s).

In no event shall Supplier be held liable for costs, fees, or damages, however arising, due to its non-provision of PFAS-Related Product(s) after December 31, 2025.
State Response: The State understands this is a slow transition for many companies and accepts this submittal.

Question 4: Section 42. DELIVERY TIME (page 13). Section 42.1 states, "The successful Vendor shall be required to accomplish delivery of any item ordered under the contract within five (5) business days from the placement of the order." As a prospective vendor, our standard delivery time ranges between 30 - 45 ARO, product dependent. Due to current and potential raw material constraints in the marketplace, delivery dates may be delayed up to 120 days ARO. Will the State accept delivery deviations from what the bid opportunity reflects?
State Response: Addendum 2 changed the bid to read "within fifteen (15) business days. The state cannot accept a standard delivery time of 120 days ARO. It is advised to continue to place your bid and note this in your submittal as agencies may be able to plan accordingly for rare, unstocked items.

Question 5: Section 24. INVOICING, 24.3 (page 7). As a prospective vendor, our company does not offer payment discount terms and respectfully requests that the requirement be bidder optional.

State Response: The State hereby deletes this section from the bid in its entirety.

BID CURRENTLY READS:

24. INVOICING:

24.1 Invoices shall be submitted to the corresponding State agency after completion of work/acceptance of delivery.

24.2 The Vendor shall track manufacturer discounts and/or rebates offered and provide a credit on the State's next invoice. The Vendor shall submit reports quarterly to James Poulin at James.M.Poulin@DAS.NH.Gov at the Bureau of Purchase and Property detailing manufacturer discounts and/or rebates paid out to the State.

24.3 The Vendor shall provide prompt payment discounts offered for invoice payments prior to the State's standard 30-day due date for payments. Orders $10,000.00 and above will receive a 0.50% discount off invoice.

Payment Time	Discount %
30 Days	Standard Payment Terms
Within 10 Days	0.25%
Within 5 Days	0.50%

CHANGE BID TO READ:

24. INVOICING:

24.1 Invoices shall be submitted to the corresponding State agency after completion of work/acceptance of delivery.

PURCHASING AGENT: JAMES POULIN
Email: NH.Purchasing@das.nh.gov

NOTE: ALL CHANGES TO BID SOLICITATION NOTED IN ADDENDUMS WILL SUPERSEDE PREVIOUSLY SUBMITTED DOCUMENTS AND MUST BE SUBMITTED WITH THE BID. ALL OTHER SPECIFICATIONS REMAIN UNCHANGED AND VALID.

RESPONDENT BUSINESS NAME: 3M Company

ADDRESS: 3M Center, 223-3W-33, St. Paul, MN 55144-1000

PRINT NAME: Maria Paraschou SIGNATURE: Maria Paraschou

TEL. NO. 651-381-2837 EMAIL ADDRESS: jlstahosky@mmm.com

Please visit: https://das.nh.gov/purchasing/vendorresources.aspx (click on "Bid and Proposals") for complete bid and addendums.

STATE OF NEW HAMPSHIRE
DIVISION OF PROCUREMENT AND SUPPORT SERVICES

BUREAU OF PURCHASE AND PROPERTY
STATE HOUSE ANNEX
25 CAPITOL STREET
CONCORD, NEW HAMPSHIRE 03301-6398

Date of Change: September 3, 2024

ADDENDUM # 04 TO BID INVITATION 2954-25

DATE AND TIME OF BID CLOSING: 9/9/2024 9:00 AM

FOR: Retroreflective and Non-reflective Sheeting

Question 1: Section 2B – What are the Standard colors?
State Response: Standard colors are blue, green, red, yellow in accordance with 49 CFR 571, S8.2

Question 2: Section 4A – Please clarify if the estimated annual usages stated are in rolls or square feet measurements
State Response: Offer sheet was updated with Addendum 1. The estimated annual usages for this section is per roll.

Question 3: Section 4A – Are you requesting just black or all colors?
State Response: "TPM5 Transfer Tape" is clear. The State is requesting this or equivalent with varying widths.

Question 4: Section 4A – Will the state accept 50 yard length rolls?
State Response: The State will accept 50 yard length rolls; please be sure to make a note on the offer sheet so usage can be doubled for that section.

PURCHASING AGENT: JAMES POULIN
Email: NH.Purchasing@das.nh.gov

NOTE: ALL CHANGES TO BID SOLICITATION NOTED IN ADDENDUMS WILL SUPERSEDE PREVIOUSLY SUBMITTED DOCUMENTS AND MUST BE SUBMITTED WITH THE BID. ALL OTHER SPECIFICATIONS REMAIN UNCHANGED AND VALID.

RESPONDENT BUSINESS NAME: 3M Company

ADDRESS: 3M Center, 223-3W-33, St. Paul, MN 55144-1000

PRINT NAME: Maria Paraschou SIGNATURE: Maria Paraschou

TEL. NO. 651-381-2837 EMAIL ADDRESS: jlstahosky@mmm.com

Please visit: https://das.nh.gov/purchasing/vendorresources.aspx (click on "Bid and Proposals") for complete bid and addendums.

3M Qualifications and Explanations

1. Section 38. ENVIRONMENTALLY FRIENDLY PRODUCTS (page 12).

Please note that this offer includes 3M™ Premium Protective Overlay Film Series 1160i, and 3M™ Process Colors Series 880I and 880N – products that contain a polyfluoroalkyl substance (PFAS). As such, the offer of these affected products is contingent upon the acceptance of the following contract clause.

> The Parties acknowledge [3M/Supplier] has announced it will exit per- and polyfluoroalkyl substance (PFAS) manufacturing by the end of 2025 and work to discontinue the use of PFAS across its product portfolio by the end of 2025. The Parties further acknowledge that one or more [Product / Good] sold under this Agreement utilizes PFAS ("PFAS-Related Product"). As this Agreement's underlying Term extends beyond December 31, 2025, and/or any renewal or extension option of the Agreement has the potential to extend the Agreement beyond December 31, 2025, the Parties acknowledge and agree 3M shall have the unilateral right to either:
>
> 1. substitute the PFAS-Related Product(s) with a product that is not PFAS-Related Product (alternate product), with the timing of such alternate product at 3M's election, or
>
> 2. terminate this Agreement as to the PFAS-Related Product(s).
>
> In no event shall 3M be held liable for costs, fees, or damages, however arising, due to its non-provision of PFAS-Related Product(s) after December 31, 2025.

2. Section 42. DELIVERY TIME (page 13). Section 42.1

3M Company's standard delivery time ranges between 30 - 45 ARO, product dependent. Due to current and potential raw material constraints in the marketplace, delivery dates may be delayed up to 120 days ARO.

3M Commercial Branding &
Transportation Division
3M Center, Bldg, 223-3S-33
St. Paul, MN 55144-1000
Phone: 651 733 1110

September 6, 2024

Mr. James Poulin
State of New Hampshire
The Bureau of Procurement & Support Services
25 Capitol Street
Concord, NH 03301
NH.Purchasing@das.nh.gov

Subject: Request For Bid For Retroreflective & Non-Reflective Sheeting # 2954-25

Material Specification

CERTIFICATE OF COMPLIANCE

3M Company has reviewed the specifications and requirements contained in Request For Bid # 2954-25 and certifies that the material supplied will meet all the specifications noted within and all the requirements listed herein.

Sincerely,

Maria Paraschou

Maria Paraschou
Sr. Proposal & Contract Manager
3M Commercial Branding & Transportation Division

3M Product Bulletins

- 3M™ Engineer Grade Reflective Sheeting Series 3430 Product Bulletin
- 3M™ High Intensity Prismatic Reflective Sheeting Series 3930 Product Bulletin
- 3M™ Diamond Grade™ Reflective Sign Sheeting Series 4000 Product Bulletin
- 3M™ Advanced Flexible Engineer Grade Reflective Sheeting Series 7300
- 3M™ Premium Protective Overlay Film 1160i
- 3M™ ElectroCut™ Film Series 1170 Product Bulletin
- 3M™ Process Color Series 880I, 880N, and 900 Product Bulletins

Science.
Applied to Life.™

Commercial Branding & Transportation Division

3M™ Engineer Grade Prismatic Reflective Sheeting Series 3430

Product Bulletin Series 3430
April 2023
For U.S.A.

Replaces Product Bulletin Series 3430 Dated October 2013

1 Description

3M™ Engineer Grade Prismatic Reflective Sheeting Series 3430 ("**Sheeting**") is a retroreflective sheeting designed for use in the production of reflective commercial signs and noncritical traffic control signs ("**Sign**") that are exposed vertically in service. The Sheeting can easily be identified by its visible integral "EGP" marking.

For detailed features and benefits of the Sheeting, please refer to the 3M Transportation Safety Division website (http://www.3M.com/roadsafety).

3M™ Engineer Grade Prismatic Reflective Sheeting Series 3430 is available in the following colors.

Table 1. Product Codes by Color

Color	Product Code
White	3430
Yellow	3431
Green	3437

2 Specifications

The Sheeting conforms to all current performance requirements of ASTM D4956 for Type I retroreflective sheeting. Refer to section 7 for information regarding imaging of Sheeting.

3 Physical Properties

3.1 Adhesive

Sheeting comes with a pressure-sensitive adhesive that is recommended for application at temperatures of 65 °F (18 °C) and higher.

3.2 Entrance Angularity Performance with Respect to Orientation

Sheeting has been designed to be an effective wide angle reflective sheeting regardless of its orientation on the substrate or the ultimate orientation of the Sign after installation. However, because the efficiency of light return from cube corner reflectors is not equal at all application orientations, especially at higher entrance angles, it is possible to get the widest entrance angle light return when the Sheeting is oriented in a particular manner. Sheeting orientation can be used to easily optimize high entrance angle (>50°) performance when it is required for a given Sign (e.g. "keep right" symbols). In such situations, the completed Sign should have the Sheeting positioned at the 0° orientation (downweb direction perpendicular to the road). When the "primary groove line" (which is oriented parallel to the flat sides of the diamond chain links) is vertical on the completed Sign, Sheeting is said to be in a 0° orientation. When the "primary groove line" is horizontal on the completed Sign, the Sheeting is said to be in a 90° orientation. See Figure 1 for details.

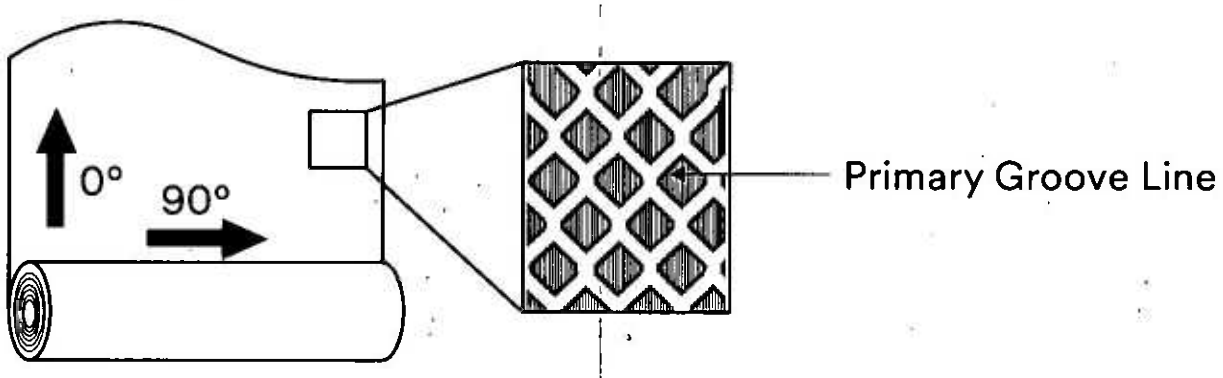

Figure 1. Primary groove lines used to define Sheeting orientation.

Unless a Sign's location and/or position calls for extra-wide entrance angularity performance or a specific installation direction is required in a customer specification, Signs and applied copy (letters, arrows, borders, and shields) can be fabricated and installed using the application orientation that most efficiently utilizes the reflective Sheeting.

Note: For multi-panel Signs, it is recommended that all background panels be applied with the Sheeting oriented in the same direction.

Sheeting may be processed into traffic Signs using any of the imaging methods described below. 3M assumes no responsibility for the failures of Sign face legends or backgrounds that have been processed with non-3M process colors or with matched component imaging materials other than those listed below.

4 Substrates

Refer to 3M Information Folder 1.7 for surface preparation recommendations.

Sheeting has been designed primarily for application to flat substrates. Any application to a substrate with a radius of curvature of less than five inches should also be supported by rivets or bolts. Plastic substrates are not recommended where cold shock performance is required. **Sign failures caused by substrate failures or improper surface preparations are not the responsibility of 3M.**

5 Sign Fabrication

5.1 Squeeze Roll Application

Sheeting should be applied to Sign substrates at temperatures of 65°F (18°C) and higher using either of the following methods:

Mechanical squeeze roll applicator – refer to 3M Information Folder 1.4. Applications to extrusions that are edge wrapped require sufficient softening of the Sheeting prior to edge wrapping. Softening can be accomplished by directing additional heat to the "next to last" edge roller. This practice may increase productivity and minimize cracking.

Hand squeeze roll applicator – refer to 3M Information Folder 1.6 for details.

Background and complete Sign applications of Sheeting must be performed using a roll laminator, either mechanical or hand driven.

5.2 Hand Application

Hand application is recommended for legend and copy only. Refer to 3M Information Folder 1.5 for more details.

Hand applications will show some visual irregularities which may be objectionable to aesthetically critical customers. These irregularities are more noticeable on darker colors. To obtain a uniform close-up appearance, a roll laminator must be used.

All direct-applied copy and border MUST be cut and squeegeed at all metal joints.

5.3 Splices

Sheeting must be butt spliced when more than one piece of Sheeting is used on a single piece of substrate. Sheeting pieces should not touch one another. Avoiding overlap prevents the buckling that can occur as Sheeting expands under extreme temperature and humidity conditions.

5.4 Double Faced Signs

The Sheeting on the bottom side of a double faced Sign can be damaged if rolled through a squeeze roll applicator using an unprotected steel bottom roller. The use of a semi-soft flat sheet between the steel roller and the applied Sign face will protect the Sign face from damage. Use of a rubber mat, tag board, or cardboard is recommended.

6 Imaging

Sheeting may be processed into traffic Signs using the imaging methods described below.

6.1 Digital Imaging

Digitally imaged areas of white Sheeting that have been processed according to 3M instructions shall provide coefficients of retroreflection of not less than 70% of the values of the corresponding ASTM D4956 Type I sheeting colors. The daytime luminance and chromaticity shall conform to ASTM D4956 tables 2 and 11, respectively.

Conformance to the ASTM D4956 performance requirements for Type I sheeting has been established when 3M printing requirements and procedures are followed. Most consistent results are achieved when 3M's system of matched component materials (Tables 5 and 6) are used.

Use of Sheeting is not restricted to the inks/printers listed below. Sheeting may perform adequately with select latex, solvent and UV ink jet inks and printers. Please contact your 3M representative for more information on ink and print system compatibilities.

Table 2. Matched components and traffic color availability for permanent regulated or non-regulated traffic control signs and stickers.

3M Digital Printing Solutions[a]	Traffic Colors	Ink	Overlay Film
HP Latex 360/365	Red, green, and black	HP Series 831 Inkjet Ink	3M™ ElectroCut™ Film Series 1170C or 3M™ Premium Protective Overlay Film Series 1160i

a. Must be printed according to all requirements described in printer specific 3M Information Folders, including printer settings and profiles.

6.2 Screen Processing

The Sheeting may be screen processed into traffic Signs, using 3M Process Colors Series 880I (see 3M Product Bulletin 880I) or Series 880N (see 3M Product Bulletin 880N), before or after being mounted onto a Sign substrate. Series 880I and 880N process colors can be screened at temperatures of 60-100°F (16-38°C) and relative humidities of 20-50%. A P.E. 157 screen mesh with a fill pass is recommended. See 3M Information Folder 1.8 for details regarding screen processing. The use of process colors other than Series 880I or 880N is not recommended. 3M assumes no responsibility for failures of Sign face legends or backgrounds that have been processed with process colors other than those listed above.

The R_A values of areas of white Sheeting screen printed with 3M transparent inks or covered with 3M™ ElectroCut™ Film Series 1170 should be no less than 70% of the minimum R_A values of the corresponding Sheeting colors.

3M process colors and colored film, when used according to 3M recommendations, will meet the applicable ASTM D4956 specifications of the equivalent integrally colored sheeting. However, dilution of color and atmospheric conditions may result in reduced durabilities. 3M ElectroCut Film Series 1170 can be expected to perform satisfactorily for the life of the Sign when direct applied to the Sheeting.

Care should be taken to avoid flexing Sheeting before, and especially after, screening to minimize the possibility of cracking from improper handling.

6.3 3M™ ElectroCut™ Film

3M™ ElectroCut™ Film Series 1170 may be used on Sheeting to provide transparent colored background copy for traffic control Signs. Refer to 3M Product Bulletin 1170 for fabrication procedures.

6.4 Applying Cut-Out Copy

3M™ Engineer Grade Prismatic Reflective Sheeting may be applied to sheeting backgrounds to create Sign legends. Refer to 3M Information Folder 1.10 for more information.

7 Cutting

Sheeting may be cut into letters and shapes with heights of at least 3 inches and stroke widths of at least ½ inch. Smaller sizes are not recommended. Sealing the cut edges of Sheeting is not required.

7.1 Plotter Cutting

1 Flat bed plotters can be used to cut Sheeting and offer the most consistent and reliable performance.
2 Friction fed plotters can be used to kiss cut only. This is achieved using 600 grams of down force and a 60° cutting blade. Additional drive wheels may be needed to improve tracking. Alternatively, Sheeting can be cut from the liner side. To do so, the blade force and knife depth must be set to score, but not cut through, the top film. After scoring, break apart individual copy or apply premask to retain spacing.

7.2 Other Cutting Methods

Sheeting may be hand cut or die cut one sheet at a time. Cutting procedures can be found in 3M Information Folder 1.10.

8 Installation

Nylon washers are required when twist style fasteners are used to mount Signs

9 Shelf-Life, Processing, Storage, Packaging, and Cleaning

Please refer to 3M Information Folder1.11.

10 Durability

Please refer to 3M Information Folder 1.7. Periodic Sign inspection and regular Sign replacement are strongly recommended in order to help Sign owners establish their own effective service life expectations, beyond the warranty period.

11 Health and Safety Information

Read all health hazard, precautionary, and first aid statements found in the Safety Data Sheets (SDS), Article Information Sheets, and products labels of any materials for important health, safety, and environmental information prior to handling or use. To obtain SDSs and Article Information Sheets for 3M products, go to 3M.com/SDS, contact 3M by mail, or for urgent requests call 1-800-364-3577.

12 Warranty Information

12.1 3M Standard Warranty

The Sheeting is warranted ("3M Standard Warranty") to be free of defects in materials and manufacture at the time of shipment and to meet the specifications stated in this product bulletin. If the Sheeting is proven not to have met the 3M Standard Warranty on their shipment date, then a buyer's exclusive remedy, and 3M's sole obligation, at 3M's option, will be refund or replacement of the Sheeting.

12.2 Disclaimer

THE 3M WARRANTY IS MADE IN LIEU OF ALL OTHER WARRANTIES OR CONDITIONS, EXPRESS OR IMPLIED, INCLUDING BUT NOT LIMITED TO ANY IMPLIED WARRANTY OR CONDITION OF MERCHANTABILITY, OR FITNESS FOR A PARTICULAR PURPOSE, OR ANY IMPLIED WARRANTY ARISING OUT OF A COURSE OF DEALING OR OF PERFORMANCE, CUSTOM, OR USAGE OF TRADE.

12.3 Limitation of Liability

Except for the limited remedy stated above, and except where prohibited by law, 3M will not be liable for any loss or damage arising from the Signs or any 3M product, whether direct, indirect, special, incidental, or consequential damages (including but not limited to lost profits, business, or revenue in any way), regardless of the legal theory asserted including warranty, contract, negligence, or strict liability.

13 Other Product Information

Always confirm that you have the most current version of the applicable product bulletin, information folder, or other product information from 3M's Website at http://www.mmm.com/roadsafety.

14 Literature References

3M IF 1.4	Instructions for Interstate Squeeze Roll Applicator
3M IF 1.5	Hand Application Instructions
3M IF 1.6	Hand Squeeze Roll Applicator
3M IF 1.7	Sign Base Surface Preparation
3M IF 1.8	Process Colors Series 880 and 900 Instructions for Use
3M IF 1.10	Cutting, Premasking, and Prespacing
3M IF 1.11	Sign Maintenance Management
3M PB 880I	3M™ Process Color Series 880I
3M PB 880N	3M™ Process Color Series 880N
3M PB 1170	3M™ ElectroCut™ Film Series 1170

ASTM Test Methods are available from ASTM International, West Conshohocken, PA.

For Information or Assistance
Call: 1-800-553-1380
In Canada Call:
1-800-3M HELPS (1-800-364-3577)

Internet:
http://www.3M.com/roadsafety

3M, 3M Science. Applied to Life., Diamond Grade, MCS, and ElectroCut are trademarks of 3M. Used under license in Canada.
All other trademarks are the property of their respective owners.

3M assumes no responsibility for any injury, loss, or damage arising out of the use of a product that is not of our manufacture. Where reference is made in literature to a commercially available product, made by another manufacturer, it shall be the user's responsibility to ascertain the precautionary measures for its use outlined by the manufacturer.

Important Notice
All statements, technical information and recommendations contained herein are based on tests we believe to be reliable at the time of this publication, but the accuracy or completeness thereof is not guaranteed, and the following is made in lieu of all warranties, or conditions express or implied. Seller's and manufacturer's only obligation shall be to replace such quantity of the product proved to be defective. Neither seller nor manufacturer shall be liable for any injury, loss, or damage, direct, indirect, special, or consequential, arising out of the use of or the inability to use the product. Before using, user shall determine the suitability of the product for his/her intended use, and user assumes all risk and liability whatsoever in connection therewith. Statements or recommendations not contained herein shall have no force or effect unless in an agreement signed by officers of seller and manufacturer.

3M

Commercial Branding &
Transportation Division
3M Center, Building 223-3S-33
St. Paul, MN 55144-1000 USA

Phone 1-800-553-1380
Web 3M.com/roadsafety

Please recycle. Printed in USA © 3M 2023.
All rights reserved. Electronic only

Science.
Applied to Life.™

Commercial Branding and Transportation Division

3M™ High Intensity Prismatic Reflective Sheeting Series 3930

Product Bulletin Series 3930
October 2023

Replaces Product Bulletin Series 3930 Dated March 2023

1 Description

3M™ High Intensity Prismatic Reflective Sheeting Series 3930 ("**Sheeting**") is a reflective prismatic sheeting designed for use in the production of durable reflective traffic control and guidance signs ("**Signs**") that are exposed vertically in service.

For details of the features and benefits of Sheeting, please refer to the 3M Commercial Branding and Transportation Division website (http://www.3M.com/roadsafety/).

The Sheeting is available in the following colors.

Table 1. Product codes by color.

Color	Product Code
White	3930
Yellow	3931
Red	3932
Orange	3934
Blue	3935
Green	3937
Brown	3939

2 Specifications

The Sheeting conforms to all current performance requirements of ASTM D4956 for Type III and Type IV retroreflective sheeting. Refer to section 7 for information regarding imaging of Sheeting.

3 System of Matched Components

For a complete list of matched components for the Sheeting, please see the 3M™ Sign Warranty Bulletin.

4 Physical Properties

4.1 Adhesive

Sheeting has a pressure-sensitive adhesive that is recommended for application at temperatures of 65 °F (18 °C) and higher. Meets ASTM D4956 Class I adhesive requirement.

4.2 Entrance Angularity Performance with Respect to Orientation

Sheeting has been designed to be an effective wide angle reflective sheeting regardless of its orientation on the substrate or the ultimate orientation of the Sign after installation. However, because the efficiency of light return from cube corner reflectors is not equal at all application orientations, especially at higher entrance angles, it is possible to get the widest entrance angle light return when the Sheeting is oriented in a particular manner. Sheeting orientation can be used to easily optimize high entrance angle (>50°) performance when it is required for a given Sign (e.g. "keep right" symbols). In such situations, the completed Sign should have the Sheeting positioned at the 0° orientation (downweb direction perpendicular to the road). When the "primary groove line" (which is oriented parallel to the flat sides of the diamond chain links) is vertical on the completed Sign, Sheeting is said to be in a 0° orientation. When the "primary groove line" is horizontal on the completed Sign, the Sheeting is said to be in a 90° orientation. See Figure 1 for details.

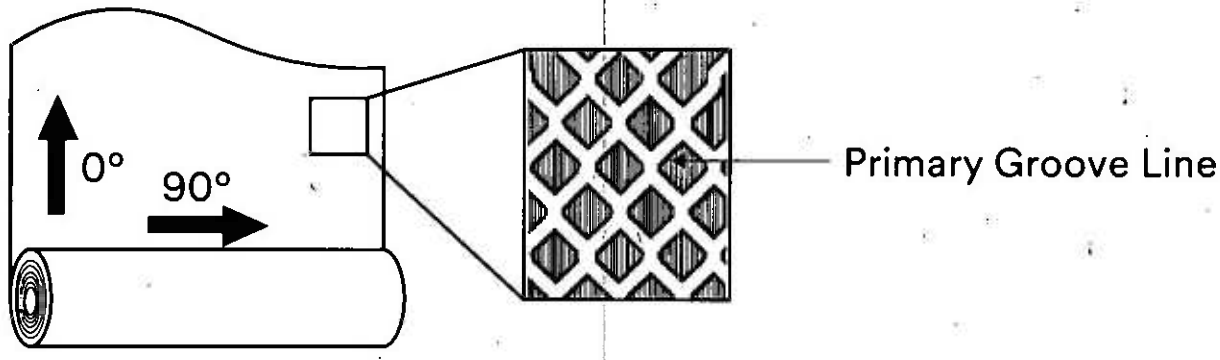

Figure 1. Primary groove lines used to define Sheeting orientation.

Unless a Sign's location and/or position calls for extra-wide entrance angularity performance or a specific installation direction is required in a customer specification, Signs and applied copy (letters, arrows, borders, and shields) can be fabricated and installed using the application orientation that most efficiently utilizes the reflective Sheeting.

Note: For multi-panel Signs, it is recommended that all background panels be applied with the Sheeting oriented in the same direction.

5 Substrates

Refer to 3M Information Folder 1.7 for surface preparation recommendations.

Sheeting has been designed primarily for application to flat substrates. Any application to a substrate with a radius of curvature of less than five inches should also be supported by rivets or bolts. Plastic substrates are not recommended where cold shock performance is required. **Sign failures caused by substrate failures or improper surface preparations are not the responsibility of 3M.**

6 Sign Fabrication Methods

6.1 Squeeze Roll Application

Sheeting should be applied to Sign substrates at temperatures of 65 °F (18 °C) and higher using either of the following methods:

Mechanical squeeze roll applicator – refer to 3M Information Folder 1.4. Applications to extrusions that are edge wrapped require sufficient softening of the Sheeting prior to edge wrapping. Softening can be accomplished by directing additional heat to the "next to last" edge roller. This practice may increase productivity and minimize cracking.

Hand squeeze roll applicator – refer to 3M Information Folder 1.6 for details.

Background and complete Sign applications of Sheeting must be performed using a roll laminator, either mechanical or hand driven.

6.2 Hand Application

Hand application is recommended for legend and copy only. Refer to 3M Information Folder 1.5 for more details.

Hand applications are more likely to show visual irregularities that may be objectionable to aesthetically critical customers. These irregularities are more noticeable on darker colors. To obtain a uniform close-up appearance, a roll laminator must be used.

All direct applied copy and border **MUST** be cut and squeegeed at all metal joints.

6.3 Splices

Sheeting must be butt spliced when more than one piece of Sheeting is used on a single piece of substrate. Sheeting pieces should not touch one another. Avoiding overlap prevents the buckling that can occur as Sheeting expands under extreme temperature and humidity conditions.

6.4 Double Faced Signs

The Sheeting on the bottom side of a double faced Sign can be damaged if rolled through a squeeze roll applicator using an unprotected steel bottom roller. The use of a semi-soft flat sheet between the steel roller and the applied Sign face will protect the Sign face from damage. Use of a rubber mat, tag board, or cardboard is recommended.

7 Imaging

Sheeting may be processed into traffic Signs using the imaging methods described below. Compatibility is backed with a 3M™ MCS™ Warranty or 3M™ MCS™ Warranty for Traffic when the printing guidelines referred to in the Literature References of Section 15 are followed. See Section 13 of this document for more information regarding the warranties. 3M assumes no responsibility for the failures of Sign face legends or backgrounds that have not been processed according to the 3M Sign Warranty Bulletin.

7.1 Digital Imaging

Sheeting is compatible with 3M qualified latex inkjet printers and ink systems. Refer to 3M Information Folder 1.17 and HP Large Format Printing Knowledge Center for details. Use of 3M™ ElectroCut™ Film 1170C or 3M™ Premium Protective Overlay Film Series 1160i is required.

7.2 Screen Processing

Sheeting may be screen processed into traffic Signs using 3M™ Process Colors Series 880I or 3M™ Process Colors Series 880N before or after being mounted onto a substrate. Refer to 3M Information Folder 1.8 for details. Clear coating is neither required nor recommended. Use of process color series other than 880I or 880N is not recommended.

7.3 3M™ ElectroCut™ Film

3M™ ElectroCut™ Film Series 1170 may be used on Sheeting to provide transparent colored background copy for traffic control Signs. Refer to 3M Product Bulletin 1170 for fabrication procedures.

7.4 Applied Cut-Out Copy

Sheeting cut-out copy may be applied to Sheeting backgrounds to create Sign legends. Refer to 3M Information Folder 1.10 for more information.

8 Cutting

Sheeting may be cut into letters and shapes with heights of at least 3 inches and stroke widths of at least ½ inch. Smaller sizes are not recommended. Sealing the cut edges of Sheeting is not required.

8.1 Plotter Cutting

1 Flat bed plotters can be used to cut Sheeting and offer the most consistent and reliable performance.
2 Friction fed plotters can be used to kiss cut only. This is achieved using 600 grams of down force and a 60° cutting blade. Additional drive wheels may be needed to improve tracking. Alternatively, Sheeting can be cut from the liner side. To do so, the blade force and knife depth must be set to score, but not cut through, the top film. After scoring, break apart individual copy or apply premask to retain spacing.

8.2 Other Cutting Methods

Sheeting may be hand cut or die cut one sheet at a time. Cutting procedures can be found in 3M Information Folder 1.10.

9 Installation

Nylon washers are required when twist style fasteners are used to mount Signs.

10 Shelf-Life, Processing, Storage, Packaging, and Cleaning

Please refer to 3M Information Folder1.11.

11 Durability

Please refer to 3M Information Folder 1.7. Periodic Sign inspection and regular Sign replacement are strongly recommended in order to help Sign owners establish their own effective service life expectations, beyond the warranty period.

12 Health and Safety Information

Read all health hazard, precautionary, and first aid statements found in the Safety Data Sheets (SDS), Article Information Sheets, and products labels of any materials for important health, safety, and environmental information prior to handling or use. To obtain SDSs and Article Information Sheets for 3M products, go to 3M.com/SDS, contact 3M by mail, or for urgent requests call 1-800-364-3577.

13 Warranty Information

13.1 3M Standard Product Warranty

The Sheeting is warranted ("3M Standard Warranty") to be free of defects in materials and manufacture at the time of shipment and to meet the specifications stated in this product bulletin. If the Sheeting is proven not to have met the 3M Standard Warranty on their shipment date, then a buyer's exclusive remedy, and 3M's sole obligation, at 3M's option, will be refund or replacement of the Sheeting.

13.2 3M™ MCS™ Warranty and 3M™ MCS™ Warranty for Traffic

For warranty on digitally printed Sheeting, please refer to the 3M Sign Warranty Bulletin.

13.3 Disclaimer

THE 3M WARRANTY IS MADE IN LIEU OF ALL OTHER WARRANTIES OR CONDITIONS, EXPRESS OR IMPLIED, INCLUDING BUT NOT LIMITED TO ANY IMPLIED WARRANTY OR CONDITION OF MERCHANTABILITY, OR FITNESS FOR A PARTICULAR PURPOSE, OR ANY IMPLIED WARRANTY ARISING OUT OF A COURSE OF DEALING OR OF PERFORMANCE, CUSTOM, OR USAGE OF TRADE.

13.4 Limitation of Liability

Except for the limited remedy stated above, and except where prohibited by law, 3M will not be liable for any loss or damage arising from the Signs or any 3M product, whether direct, indirect, special, incidental, or consequential damages (including but not limited to lost profits, business, or revenue in any way), regardless of the legal theory asserted including warranty, contract, negligence, or strict liability.

14 Other Product Information

Always confirm that you have the most current version of the applicable product bulletin, information folder, or other product information from 3M's Website at http://www.3M.com/roadsafety.

15 Literature References

3M IF 1.4	Instructions for Interstate Squeeze Roll Applicator
3M IF 1.5	Hand Application Instructions
3M IF 1.6	Hand Squeeze Roll Applicator
3M IF 1.7	Sign Base Surface Preparation
3M IF 1.8	Process Colors Series 880 and 900 Instructions for Use
3M IF 1.10	Cutting, Premasking, and Prespacing
3M IF 1.11	Sign Maintenance Management
3M IF 1.17	User Guide 3M™ Reflective Sheeting and HP Latex 360/365 Printers
3M PB 880I	3M™ Process Color Series 880I
3M PB 880N	3M™ Process Color Series 880N
3M PB 1160i	3M™ Premium Protective Overlay Film 1160i
3M PB 1170	3M™ ElectroCut™ Film Series 1170
3M PB Slipsheeting	3M™ Slipsheeting

3M Sign Warranty Bulletin
3M™ MCS™ Warranty for Traffic Matrix for ElectroCut™ Film Series 1170
3M™ MCS™ Warranty for Traffic Matrix for Screen Printed Signs
3M™ MCS™ Warranty for Traffic Matrix for Unimaged 3M™ Retroreflective Sheeting
3M™ MCS™ Warranty Matrix for HP Latex 360/365 Printers
3M™ MCS™ Warranty for Traffic Matrix HP 360-365
3M™ MCS™ Warranty Matrix for HP Latex 1500 Printer
3M™ MCS™ Warranty Matrix for Traffic for HP Latex 1500 Printer
HP 700, HP 800 Matrix
HP 700, HP 800 Matrix for Traffic

HP Large Format Printing Knowledge Center

ASTM Test Methods are available from ASTM International, West Conshohocken, PA.

For Information or Assistance
Call: 1-800-553-1380
In Canada Call:
1-800-3M HELPS (1-800-364-3577)

Internet:
http://www.3M.com/roadsafety

3M, 3M Science. Applied to Life., ElectroCut, and MCS are trademarks of 3M. Used under license in Canada.
All other trademarks are the property of their respective owners.

3M assumes no responsibility for any injury, loss, or damage arising out of the use of a product that is not of our manufacture. Where reference is made in literature to a commercially available product, made by another manufacturer, it shall be the user's responsibility to ascertain the precautionary measures for its use outlined by the manufacturer.

Important Notice
All statements, technical information and recommendations contained herein are based on tests we believe to be reliable at the time of this publication, but the accuracy or completeness thereof is not guaranteed, and the following is made in lieu of all warranties, or conditions express or implied. Seller's and manufacturer's only obligation shall be to replace such quantity of the product proved to be defective. Neither seller nor manufacturer shall be liable for any injury, loss, or damage, direct, indirect, special, or consequential, arising out of the use of or the inability to use the product. Before using, user shall determine the suitability of the product for his/her intended use, and user assumes all risk and liability whatsoever in connection therewith. Statements or recommendations not contained herein shall have no force or effect unless in an agreement signed by officers of seller and manufacturer.

3M

Commercial Branding and Transportation Division
3M Center, Building 0225-04-N-14
St. Paul, MN 55144-1000 USA

Phone 1-800-553-1380
Web 3M.com/roadsafety

Please recycle. Printed in USA © 3M 2023.
All rights reserved. Electronic only

Science.
Applied to Life.™

Transportation Safety Division

3M™ Diamond Grade™ DG^3 Reflective Sheeting Series 4000

Product Bulletin 4000
January 2020

Replaces Product Bulletin 4000 Dated August 2019

1 Description

3M Diamond Grade DG^3 Reflective Sheeting Series 4000 ("Sheeting") features the most efficient retroreflective prism design currently available from 3M for use on vertical traffic control signs and delineators to return light to drivers under a diverse set of nighttime viewing geometries encountered by the driving public. Sheeting, as manufactured by 3M, meets the stringent retroreflective requirements described in the ASTM D4956 standard for Type XI retroreflective Sheeting.

The Sheeting is available in the following colors.

Table 1: Product Codes by Color

Color	Product Code
White	4090
Yellow	4091
Red	4092
Blue	4095
Green	4097
Brown	4099
Fluorescent Yellow - FY	4081
Fluorescent Yellow-Green - FYG	4083
Fluorescent Orange - FO	4084

2 Specifications

The Sheeting conforms to all current performance requirements of ASTM D4956 for Type XI retroreflective sheeting. Additionally, the Sheeting meets the following specifications.

2.1 Legibility

A traffic control and guidance sign ("Sign") made with the Sheeting used for both Sign background and cut-out copy will remain legible when viewed from a moving vehicle under normal day and night driving conditions by not excessively fading, discoloring, cracking, crazing, peeling, and blistering during the legibility periods in the locations as given in Table 2. Signs must be manufactured, installed, and maintained as recommended in the applicable 3M Information Folders listed in Section 16, and legibility must be assessed after Signs have been cleaned as described in 3M Information Folder 1.11. Legibility Period is measured from the initial Sign fabrication date ("Fabrication Date"), and varies by Sign location as shown in Table 2.

Table 2. Sheeting Legibility Periods by Sheeting and Geographic Sign Location

Sheeting	Geographic Location of Sign	Legibility Period [from Fabrication Date]
4090, 4091, 4092, 4095, 4097, 4099	US & Canada	Up to 12 Years
4081, 4083	Alabama, Arizona, Florida, Georgia, Hawaii, Louisiana, Mississippi, New Mexico, South Carolina, and Texas	Up to 7 Years
	Canada and US other than the above States	Up to 10 Years
4084	US & Canada	Up to 3 Years

2.2 Gloss

The Sheeting has a rating of 50 or higher when tested in accordance with ASTM D523 using a 60° glossmeter.

2.3 Optical Stability

The Sheeting, applied to a 3-inch x 6-inch test panel, shall retain a minimum of 85% and a maximum of 115% of its initial coefficient of retroreflection when measured at a 0.2° observation and -4° entrance angle, after being placed in an oven at 71 ± 3 °C (160 ± 5 °F) for 24 hours followed by conditioning at standard room temperature for two hours.

2.4 Coefficient of Retroreflection (R_A)

Table 3 describes the durations and coefficients of retained retroreflection[1] for Signs fabricated with the Sheeting for use in the US and Canada. The values presented in Table 3 apply only to Sheeting that has been applied, processed, installed, maintained, and cleaned as recommended in the applicable 3M Information Folders listed in Section 16 of this product bulletin.

Table 3. Minimum Retained coefficient of retroreflection[a] (R_A, [cd/lx/m^2]) for Sheeting over time

Sheeting	Years from Fabrication Date	Minimum Retained Coefficient of Retroreflection [cd/lx/m^2]
4090, 4091, 4092, 4095, 4097, 4099	On Fabrication Date	ASTM D4956 Type XI
	Up to 7 Years	80% of ASTM D4956 Type XI
	8-12 Years	70% ASTM D4956 Type XI
4081, 4083	On Fabrication Date	ASTM D4956 Type XI
	Up to 7 Years/10 Years[a]	70% of ASTM D4956 Type XI
4084	On Fabrication Date	ASTM D4956 Type XI
	Up to 3 Years	70% of ASTM D4956 Type XI

a. The retained coefficient of retroreflection applies for 7 years after Fabrication Date for the following states: Alabama, Arizona, Florida, Georgia, Hawaii, Louisiana, Mississippi, New Mexico, South Carolina, and Texas. For all other locations the retained coefficient of retroreflection is for 10 years.

1. Conformance to coefficient of retroreflection requirements shall be determined instrumentally in accordance with ASTM E810 "Test Method for Coefficient of Retroreflection of Retroreflective Sheeting," and per E810, values obtained at 0° and 90° rotations shall be averaged to determine the R_A values referenced in Table 3.

2.5 Entrance Angularity Performance and Orientation

Sheeting has been designed to be an effective wide angle reflective Sheeting regardless of its orientation on the substrate or the ultimate orientation of the Sign after installation. However, because the efficiency of light return from cube corner reflectors is not equal at all application orientations, which is especially apparent at larger entrance angles, it is possible to get the widest entrance angle light return from a particular orientation. When high entrance angle (>50°) performance is required for a given Sign (e.g. "keep right" symbols), it can be obtained easily by properly orientating the Sheeting on the completed Sign. In such situations, the completed Sign should have the Sheeting positioned at the 0° orientation (downweb direction perpendicular to the road). When the flat side of the diamond (direction of diamond chain links) is vertical in the completed Sign, Sheeting is said to be at a 0° orientation. When the "primary groove line" (or, flat side of the diamond shape) is horizontal on the completed Sign, the Sheeting is said to be at a 90° orientation. See Figure 1 for details.

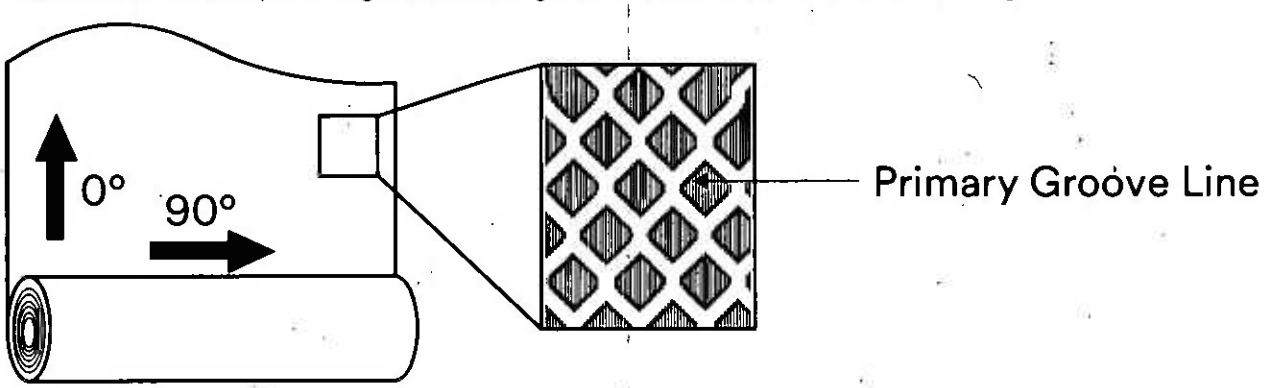

Figure 1. Primary groove line.

Unless Sign location and/or position calls for extra-wide entrance angularity performance or a specific installation direction is required in a customer specification, Signs and applied copy (letters, arrows, borders, and shields) can be fabricated and installed using the application orientation that most efficiently utilizes the reflective Sheeting.

Note: For multi-panel Signs, it is recommended that all background panels be sheeted such that the Sheeting direction is the same for all panels.

3 System of Matched Components

The Sheeting is compatible with a wide range of 3M screen print and digital inks, translucent films, overlay films and other processing components. For a complete list of matched components for the Sheeting, please see the 3M MCS™ Warranty Bulletin.

4 Physical Properties

4.1 Fabrication Lines

The Sheeting manufacturing process results in periodic fabrication lines in the product, as illustrated in Figure 2. Fabrication lines may be noticeable in shop light but do not impact Sign functionality on the road, either in daylight or at night, under typical use conditions.

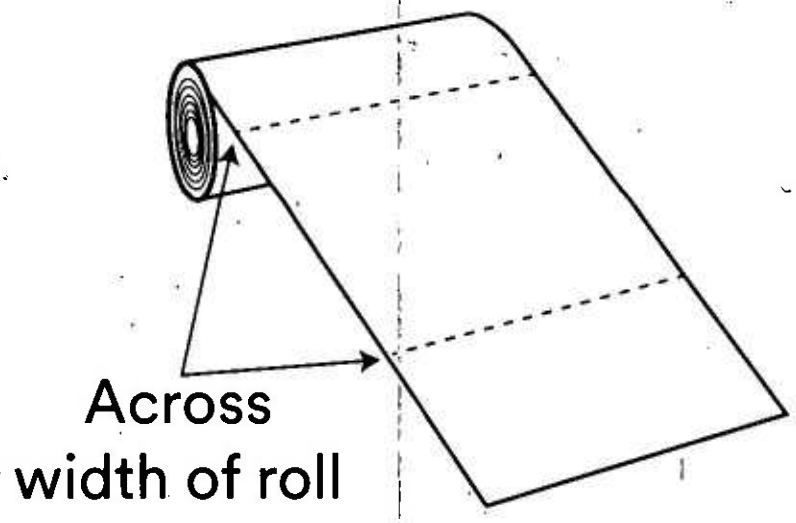

Figure 2. Fabrication lines

4.2 Adhesive

Sheeting comes with a pressure-sensitive adhesive that is recommended for application at temperatures of 65 °F (18 °C) and higher.

5 Sign Fabrication Methods

5.1 Application

Sheeting should be applied to Sign substrates at temperature of 65 °F (18 °C) and higher using any of the following methods:

Mechanical squeeze roll applicator - refer to 3M Information Folder 1.4 for details. Applications to extrusions that are edge wrapped require sufficient softening of Sheeting. This can be accomplished by directing additional heat to the "next to last" edge roller. This practice may increase productivity and minimize cracking.

Hand squeeze roll applicator - refer to 3M Information Folder 1.6 for details.

Application of Sheeting for complete Signs or backgrounds must be done using a roll laminator, either mechanical or hand driven.

5.2 Hand Application

Hand application is recommended for legend and copy only. Refer to 3M Information Folder 1.5 for more details.

Hand applications will show some visual irregularities which may be objectionable to aesthetically critical customers. These irregularities are more noticeable on darker colors. To obtain a uniform close-up appearance, a roll laminator must be used.

All direct applied copy and border MUST be cut and squeegeed at all metal joints.

5.3 Splices

Sheeting must be butt spliced when more than one piece of Sheeting is used on a single piece of substrate. Sheeting pieces should not touch one another. This is to prevent the buckling that can occur as Sheeting expands under extreme temperature and humidity conditions.

5.4 Double Faced Signs

The Sheeting on the bottom side of a double faced Sign can be damaged if rolled through a squeeze roll applicator with an unprotected steel bottom roller. The use of a semi-soft flat sheet between the steel roller and the applied Sign face will provide protection from damage. A material such as a rubber mat, tag board, or cardboard is recommended.

6 Substrates

For traffic Sign use, the substrates found to be most reliable and durable are properly prepared aluminum sheets and extrusions. **Users are urged to carefully evaluate adhesion and Sign durability properties of all other substrates.** Other substrates suitable for secure and durable applications of Sheeting have the following characteristics:

- Clean
- Smooth
- Flat
- Rigid
- Dimensionally stable
- Weather resistant
- Non-porous
- High surface energy (pass water break test)

Refer to 3M Information Folder 1.7 for surface preparation recommendations. Substrates with low surface energies may require additional preparation steps, such as flame treatment, mechanical abrasion, or use of adhesion promoters prior to Sheeting application. Guide Sign extrusions may be edge wrapped. Flat panels and unwrapped extrusions must be carefully trimmed so that Sheeting sections on adjacent panels do not touch on assembled Signs.

Sheeting is designed primarily for application to flat substrates. Any application to a substrate with a radius of curvature of less than five inches should also be supported by rivets or bolts. Plastic substrates are not recommended where cold shock performance is required. **Sign failures caused by substrate failures or improper surface preparations are not the responsibility of 3M.**

7 Imaging

Diamond Grade DG^3 prismatic Sheeting may be processed into traffic Signs using any of the imaging methods described below. 3M assumes no responsibility for the failures of Sign face legends or backgrounds that have been processed with non-3M process colors or with matched component imaging materials other than those listed below.

7.1 Digital Imaging

Sheeting is compatible with the HP Latex 360/365 printers in combination with HP 831/HP 871 Latex inks. This compatibility is backed with a 3M MCS™ Warranty and 3M MCS Warranty for Traffic when the printing guidelines in 3M Information Folder 1.18 are followed and 3M ElectroCut™ Film 1170C Clear is applied over the finished graphics. See the "Limited Warranty" section of this document for more information on the MCS Warranties.

7.2 Screen Processing

Sheeting may be screen processed into traffic Signs using 3M Process Colors Series 880I or Series 880N before or after mounting onto Sign substrates. Series 880I and 880N process colors can be screened at temperatures of 60-100 °F (16-38 °C) and at relative humidities of 20-50%. A P.E. 157 screen mesh with a fill pass is recommended. Refer to 3M Information Folder 1.8 for details. Clear coating is neither required nor recommended. Use of process colors series other than 880I or 880N is not recommended.

7.3 3M ElectroCut Film

3M ElectroCut Film Series 1170 may be used on Sheeting to provide transparent colored background copy for traffic control Signs. Refer to 3M Product Bulletin 1170 for fabrication procedures.

7.4 Applying Cut-Out Copy

Diamond Grade DG^3 Prismatic Sheeting cut-out copy may be applied to sheeting backgrounds to create Sign legends. Such cut-out copy may be applied directly to the background sheeting or in a demountable form. Direct applied copy must be cut at all panel seams and carefully trimmed back so that the Sheeting sections of adjacent panels do not touch one another on assembled Signs. Refer to 3M Information Folder 1.10 for more information.

8 Cutting

Sheeting may be cut into letters and shapes with heights of at least 3 inches and stroke widths of at least ½ inch. Smaller sizes are not recommended. Sealing the cut edges of Sheeting is not required.

8.1 Plotter Cutting

Programmable knife cut (electronic cutting):

1. Flat bed plotters can be used to either die cut or kiss cut Sheeting and offer the most consistent and reliable performance.
2. Friction fed plotters can be used to kiss cut only. This is achieved using 600 grams of down force and a 60° cutting blade. Additional drive wheels may be needed to improve tracking. Alternatively, Sheeting can be cut from the liner side. To do so, the blade force and knife depth must be set to score, but not cut through, the topfilm. After scoring, break apart individual copy or apply premask to retain spacing.

8.2 Other Cutting Methods

Sheeting may be hand cut or die cut one sheet at a time, and band sawed or guillotined in stacks. Cutting equipment such as guillotines and metal shears, which place pressure plates on the Sheeting when cutting, may damage the optics. Padding the pressure plate and easing it down onto the sheets being cut will significantly reduce damage. Maximum stack height for cutting Sheeting is 1 ½ inches, or 50 sheets. Cutting procedure details can be found in 3M Information Folder 1.10.

9 Processing, Storage, and Packaging

Sheeting should be stored in a cool, dry area, preferably at 65-75 °F (18-24 °C) and 30-50% relative humidity, and applied within two years of date of manufacture. Rolls should be stored horizontally in their shipping cartons. Partially used rolls should be returned to their shipping cartons or suspended horizontally from rods or pipes through their cores. Unprocessed sheets should be stored flat. Finished Signs and applied blanks should be stored on edge.

Avoid banding, crating, or stacking Signs. Package for shipment in accordance with commercially accepted standards to prevent movement and chafing. Store Sign packages indoors on edges.

Panels and finished Signs must remain dry during shipment and storage. If packaged Signs become wet, unpack immediately and allow Signs to dry. Refer to 3M Information Folder 1.11 for instructions on packing for storage and shipment.

10 Installation

Nylon washers are required when twist style fasteners are used to mount Signs.

11 Cleaning

Signs that require cleaning should be flushed with water, then washed with a detergent solution and soft bristle brush or sponge. Avoid pressure that may damage Sign faces. Flush with water following washing. Do not use solvents to clean Signs.

12 Durability

The durability of the Sheeting will depend upon substrate selection and preparation, compliance with recommended application procedures, geographic area, exposure conditions, and maintenance. Maximum durability can be expected in applications subject to vertical exposure on stationary objects, when processed and applied to aluminum substrates prepared according to the recommendations provided in 3M Information Folder 1.7. The user must determine the suitability of any nonmetallic Sign backing for its intended use. **Sign failures caused by substrate failures or improper surface preparations are not the responsibility of 3M.** Application to unprimed, excessively rough or non-weather resistant surfaces, or exposure to severe or unusual conditions can shorten the performance lifetime of Sheeting. Signs that are in mountainous areas and covered by snow for prolonged periods may also have reduced durabilities. Atmospheric conditions in certain geographic areas may result in reduced durability.

Periodic Sign inspection and regular Sign replacement are strongly recommended in order to help Sign owners establish their own effective service life expectations.

13 Health and Safety Information

Read all health hazard, precautionary, and first aid statements found in the Safety Data Sheets (SDS), Article Information Sheets, and product labels of any materials for important health, safety, and environmental information prior to handling or use. To obtain SDSs and Article Information Sheets for 3M products, go to 3M.com/SDS, contact 3M by mail, or for urgent requests call 1-800-364-3577.

14 Warranty Information

14.1 3M Warranty

3M warrants to the manufacturer of the Sign ("Sign Manufacturer") that the Sheeting will meet the specifications described in section 2 of this Product Bulletin ("3M Warranty").

14.2 3M MCS™ Warranty and MCS Warranty for Traffic

For warranty on screen-printed or digitally printed Sheeting, or Sheeting imaged using translucent films, please refer to the 3M MCS™ Warranty Bulletin.

14.3 3M Warranty Terms and Conditions

- The Sheeting must be stored, processed, applied, and maintained as described in this product bulletin and in accordance with all applicable, written 3M procedures provided in the applicable 3M Information Folders listed in Section 16.
- A failure to meet the 3M Warranty must be solely the result of design or manufacturing defect in the 3M Sheeting, and not a result of (a) outside causes, including improper fabrication, handling, packing, storing, shipping, maintenance, or installation; (b) non-vertical applications where the Sign is more than +/- 10° from vertical; (c) use of any material or product not recommended by 3M in this product bulletin, in the 3M Information Folders listed in Section 16, or in applicable 3M Technical Memorandums; (d) use of application equipment not recommended by 3M; (e) failure of Sign substrate; (f) loss of adhesion due to incompatible or improperly prepared substrate; (g) exposure to chemicals, abrasion, or other mechanical damage; (h) snow burial or any other Sign burial; (i) collisions, vandalism, or malicious mischief; or (j) an act of God.

- Claims made under this warranty will be honored only if (a) the Sign is dated with the Fabrication Date using a permanent method (sticker, marker, metal stamp, etc.), (b) 3M is notified in writing of the claim within thirty days of discovery, (c) 3M is provided with the information reasonably required to validate the claim, and (d) 3M is permitted to verify the cause of the failure.
- 3M is not responsible for any additional warranties that the Sign Manufacturer offers to its customers beyond the 3M Warranty.

14.4 Exclusive Limited Remedy

Valid claims under the 3M Warranty will receive either the Sign Restoration or Materials Replacement as detailed in Table 4.

Table 4. Sheeting type, location, and type of limited remedy as a function of the age of Sign

Sheeting Type	Geographic Location of Sign	Limited Remedy Period [years from Fabrication Date]	
		Sign Restoration	Materials Replacement
4090, 4091, 4092, 4095, 4097, 4099	US & Canada	Up to 7 Years	Years 8-12
4081, 4083	Alabama, Arizona, Florida, Georgia, Hawaii, Louisiana, Mississippi, New Mexico, South Carolina, and Texas	Up to 5 Years	Years 6-7
	Canada and US other than the above States	Up to 7 Years	Years 8-10
4084	US & Canada	---	Years 0-3

Sign Restoration

During the Sign Restoration period as provided in Table 4, if Sheeting is proven to not meet the 3M Warranty, then the Sign Manufacturer's exclusive remedy, and 3M's sole obligation, at 3M's option, shall be that 3M, at its expense, will either refund the Sign Manufacturer's total original cost of the Sign, or refabricate the Sign, including (i) Sheeting and (ii) the aluminum Sign substrate (as needed). However, 3M will not provide other hardware or labor to install the replacement Sign. The Fabrication Date of the replacement Sign will be considered to be the original Fabrication Date of the Sign it replaces under the 3M Warranty.

Materials Replacement

During the Materials Replacement period as provided in Table 4, if Sheeting is proven to not meet the 3M Warranty, then the Sign Manufacturer's exclusive remedy, and 3M's sole obligation, at 3M's option, shall be that 3M, at its expense, will either refund the Sign Manufacturer's total original cost of the Sheeting, or provide the necessary Sheeting quantity to restore the Sign's surface. However, 3M will not provide the substrate or any labor to refabricate or reinstall the Sign.

14.5 Disclaimer

THE 3M WARRANTY IS MADE IN LIEU OF ALL OTHER WARRANTIES OR CONDITIONS, EXPRESS OR IMPLIED, INCLUDING BUT NOT LIMITED TO ANY IMPLIED WARRANTY OR CONDITION OF MERCHANTABILITY, OR FITNESS FOR A PARTICULAR PURPOSE, OR ANY IMPLIED WARRANTY ARISING OUT OF A COURSE OF DEALING OR OF PERFORMANCE, CUSTOM, OR USAGE OF TRADE.

14.6 Limitation of Liability

Except for the limited remedy stated above, and except where prohibited by law, 3M will not be liable for any loss or damage arising from the Signs or any 3M product, whether direct, indirect, special, incidental, or consequential damages (including but not limited to lost profits, business, or revenue in any way), regardless of the legal theory asserted including warranty, contract, negligence, or strict liability.

14.7 Additional Limitations

See the 3M Digitally-Imaged Sign Warranty Bulletin for terms, additional limitations of your warranty, if any, and limitations of liability.

15 Other Product Information

Always confirm that you have the most current version of the applicable product bulletin, information folder, or other product information from 3M's Website at http://www.mmm.com/roadsafety.

16 Literature References

3M IF 1.4 Instructions for Interstate Squeeze Roll Applicator
3M IF 1.5 Hand Application Instructions
3M IF 1.6 Hand Squeeze Roll Applicator
3M IF 1.7 Sign Base Surface Preparation
3M IF 1.8 Process Colors Series 880 and 900 Instructions for Use
3M IF 1.10 Cutting, Premasking, and Prespacing
3M IF 1.11 Sign Maintenance Management
3M IF 1.17 User Guide 3M™ Reflective Sheeting and HP Latex 360/365 Printers
3M PB 1170 3M™ ElectroCut™ Film Series 1170
3M Digitally-Imaged Sign Warranty Bulletin

ASTM Test Methods are available from ASTM International, West Conshohocken, PA.

For Information or Assistance
Call: 1-800-553-1380
In Canada Call:
1-800-3M HELPS (1-800-364-3577)

Internet:
http://www.3M.com/roadsafety

3M, Science. Applied to Life., Diamond Grade, MCS, and ElectroCut are trademarks of 3M. Used under license in Canada.
All other trademarks are the property of their respective owners.

3M assumes no responsibility for any injury, loss, or damage arising out of the use of a product that is not of our manufacture. Where reference is made in literature to a commercially available product, made by another manufacturer, it shall be the user's responsibility to ascertain the precautionary measures for its use outlined by the manufacturer.

Important Notice
All statements, technical information and recommendations contained herein are based on tests we believe to be reliable at the time of this publication, but the accuracy or completeness thereof is not guaranteed, and the following is made in lieu of all warranties, or conditions express or implied. Seller's and manufacturer's only obligation shall be to replace such quantity of the product proved to be defective. Neither seller nor manufacturer shall be liable for any injury, loss or damage, direct, indirect, special, or consequential, arising out of the use of or the inability to use the product. Before using, user shall determine the suitability of the product for his/her intended use, and user assumes all risk and liability whatsoever in connection therewith. Statements or recommendations not contained herein shall have no force or effect unless in an agreement signed by officers of seller and manufacturer.

3M

Transportation Safety Division
3M Center, Building 0225-04-N-14
St. Paul, MN 55144-1000 USA

Phone 1-800-553-1380
Web 3M.com/roadsafety

Please recycle. Printed in USA © 3M 2020.
All rights reserved. Electronic Only

3M Science. Applied to Life.™

Commercial Branding and Transportation Division

3M™ Advanced Flexible Engineer Grade Reflective Sheeting Series 7300

Product Bulletin Series 7300
October 2023

Replaces Product Bulletin Series 7300 Dated November 2020

1 Description

3M™ Advanced Flexible Engineer Grade Reflective Sheeting Series 7300 ("Sheeting") is a non-metallized (corrosion resistant), non-conductive, microprismatic reflective sheeting. As manufactured by 3M, Sheeting meets the performance requirements of ASTM D4956 for Type I sheeting. It has been specially designed to have high scratch resistance and is flexible and durable. The adhesive on the Sheeting has been designed for application to a variety of signing and temporary traffic control devices, including plywood, metal, and both flat and curved reboundable plastic substrates. The Sheeting utilizes a microseal technology that provides a more uniform appearance than its 3M prismatic counterpart, 3M™ Engineer Grade Prismatic Reflective Sheeting Series 3430, and a whiter base color than 3M beaded sheeting. The incorporated microseal technology also makes the Sheeting plotter- and die-cuttable, and eliminates the need for edge sealing. The Sheeting features microprismatic optics that return light to drivers under a diverse set of nighttime viewing geometries that are encountered by the driving public. When applied to properly prepared substrates, the Sheeting provides long-term reflectivity and durability. White Sheeting has been designed for use in the production of retroreflective commercial signs, regulated and non-regulated traffic control signs that are exposed vertically in service, and pressure sensitive stickers.
The Sheeting is available in the colors and for the applications indicated in Table 1.

Table 1. Product codes and application compatibilities by color.

Color	Product Code	Temporary Traffic Control Devices and Signs	Regulated and Non-Regulated Traffic Control Signs and Stickers
White	7310	✓	✓
Yellow	7311	✓	
Orange	7314	✓	
White/Orange 4" Stripe Barricade L/R	7334L/7334R	✓	
White/Orange 6" Stripe Barricade L/R	7336L/7336R	✓	

2 Specifications

2.1 Coefficient of Retroreflection and Chromaticity

Minimum performance coefficient of retroreflection (R_A) values are presented in Table 2.

Table 2. Minimum coefficient of retroreflection, R_A, cd/fc/ft^2 (cd/lx/m^2) per ASTM D4956 for Type I signing. Measurements taken according to ASTM E810.

Observation Angle[a] (°)	Entrance Angle[b] (°)	White	Yellow	Orange
0.2	-4	70	50	25
0.2	+30	30	22	7
0.5	-4	30	25	13
0.5	+30	15	13	4

a. Observation Angle - The angle between the illumination axis and the observation axis.
b. Entrance Angle - The angle from the illumination axis to the retroreflector axis. The retroreflector axis is an axis perpendicular to the retroreflective surface.

Color specification limits and daytime luminance factor (Y%) data for Sheeting are presented in Table 3.

Table 3. Color specification limits (daytime).

									Daytime Luminance Factor (Y%)	
Color	x	y	x	y	x	y	x	y	Min.	Max
White	.303	.300	.368	.366	.340	.393	.274	.329	27	-
Yellow	.498	.412	.557	.442	.479	.520	.438	.472	15	45
Orange	.558	.352	.636	.364	.570	.429	.506	.404	14	30

3 Substrates

The most reliable and durable traffic devices and signs are made from properly prepared substrates. Refer to 3M Information Folder 1.7 for surface preparation recommendations.

3.1 Regulated and Non-Regulated Signs (White Sheeting Only)

For regulated and non-regulated traffic sign use, the substrates found to be most reliable and durable are properly prepared aluminum sheets and extrusions. Users are urged to carefully evaluate all other substrates for adhesion and sign durability. Other substrates suitable for secure and durable applications of Sheeting have the following characteristics:

- Clean
- Smooth
- Flat

- Rigid
- Dimensionally stable
- Weather resistant
- Non-porous
- High surface energy (pass water break test)

3.2 Temporary Traffic Control Devices and Signs

Refer to 3M Information Folder 1.7 for surface preparation recommendations. Substrates with low surface energies may require additional preparation steps, such as flame treatment, mechanical abrasion, or use of adhesion promoters, prior to Sheeting application.

Sheeting failures caused by substrate failures or improper surface preparations are not the responsibility of 3M. User is responsible for determining whether Sheeting is suitable for a particular purpose and application. It is up to the user to determine if a substrate is appropriate for a specific purpose and users are urged to carefully evaluate all substrates for adhesion and device durability prior to application.

4 Application

4.1 Pressure Sensitive Adhesive

The Sheeting utilizes a pressure sensitive adhesive that has been specially designed to retain adhesion over a wide temperature range and for application to a broad range of surfaces, and although not optimal, may even include moderately rough or porous wood, plastic, and a variety of metal surfaces.

For optimal adhesion, Sheeting should be applied to substrates at room temperature, 65 °F (18 °C), or higher using any of the methods described below. If Sheeting temperature is lower than 65 °F (18 °C), acclimatize it at a temperature of 65 °F (18 °C) or greater for at least 24 hours before application.

4.2 Application Equipment

1. 48" Interstate Squeeze Roll Applicator (see 3M Information Folder 1.4)
2. Hand Squeeze Roll Applicator (HSRA) (see 3M Information Folder 1.6)

Note: When using a HSRA with an air cylinder kit, apply the minimum tension needed to properly position the Sheeting on the substrate. A nip roller pressure of 80 psi is recommended for a 48 inch laminator.

4.3 Hand Application

Hand application is recommended for copy only. See 3M Information Folder 1.5 for detailed hand application instructions. Hand applications may result in visual irregularities that may be aesthetically objectionable to some users. Irregularities are more noticeable on darker colors. To obtain a close-up uniform appearance, a roll laminator must be used.

All direct applied copy and border MUST be cut at all panel seams and squeegeed at all joints. Use a squeegee with a low-friction sleeve and change the sleeve often.

4.4 Other Application Methods

Customized application equipment exists for a wide range of flat and curved substrate surfaces. The Sheeting has been found to be compatible with a variety of customized application equipment. Please contact your 3M representative for more information.

4.5 Splices

The Sheeting may be either butt spliced or overlap spliced when more than one piece of Sheeting is used on a single piece of substrate.

5 Regulated and Non-Regulated Sign Installation (White Sheeting Only)

Nylon washers are required when twist style fasteners are used to mount the sign.

6 Imaging by Screen Printing

Screen print Sheeting using 3M's system of matched component materials (Table 4). Process at a temperature of 65–100 °F (18–38 °C) and at a relative humidity of 20–50%. It is the user's responsibility to determine the suitabilities and durabilities of any other process colors. 3M assumes no responsibility for the premature failures of sign face legends that have been processed with non-recommended or non-3M process colors. Since 3M has no control over colors made by other manufacturers, the user should check with the process color manufacturer for processing recommendations and assurance of performance prior to any extensive use. To screen process regulated and non-regulated signs, a P.E. 157 screen mesh screened with a fill pass is recommended. Clear coating is neither required nor recommended. Consult 3M Information Folder 1.8 for details.

Table 4. 3M system of matched component materials.

Matched Components	
Process Color	Series 880N, Series 880I, or Series 990
Slipsheet	SCW 568
Prespacing Tape	SCPS-2
Premasking Tape	SCPM-3
Transfer Tape	TPM-5

Applications other than vertical exposure on stationary objects may have a negative effect on durability. Periodic sign inspection and regular sign replacement are strongly recommended.

7 Imaging by Digital Processing

Digitally imaged areas of white Sheeting that have been processed according to 3M instructions shall provide coefficients of retroreflection of not less than 70% of the values of the corresponding ASTM D4956 Type I sheeting colors. The daytime luminance and chromaticity shall conform to ASTM D4956 tables 2 and 11, respectively.

Conformance to the ASTM D4956 performance requirements for Type I sheeting has been established when 3M printing requirements and procedures are followed. Most consistent results are achieved when 3M's system of matched component materials (Tables 5 and 6) are used.

Use of Sheeting is not restricted to the inks/ printers listed below. Sheeting may perform adequately with select latex, solvent and UV ink jet inks and printers. Please contact your 3M representative for more information on ink and print system compatibilities.

Table 5. Matched components and color availability for permanent regulated or non-regulated traffic control signs and stickers.

3M Digital Printing Solutions[a]	Traffic Colors	Ink
Durst Rho 161TS Durst Rho 162TS	Red, blue, green, brown, yellow, and black	3M™ Piezo Inkjet Series 8800UV Ink
Durst Rho 163	Red, blue, green, brown, yellow, and black	3M™ Piezo Inkjet Series 8900UV Ink
EFI H1625-RS	Red, blue, green, brown, yellow, and black	3M™ Piezo Inkjet Series 8900UV Ink
HP 360/365	Red, green, brown, and black	HP Series 831/871 Inkjet Inks
Overlay Film (REQUIRED)	3M™ ElectroCut™ Film, Series 1170	

a. Must be printed according to the requirements including printer settings and profiles given in printer specific product bulletins.

Table 6. Matched components and color availability for temporary traffic control signs.

3M Digital Printing Solutions[a]	Traffic Colors	Ink
Durst Rho 161TS Durst Rho 162TS	Black	3M™ Piezo Inkjet Series 8800UV Ink
Durst Rho 163		3M™ Piezo Inkjet Series 8800UV Ink
EFI H1625-RS		3M™ Piezo Inkjet Series 8800UV Ink
HP 360/365		HP Series 831/871 Inkjet inks
Overlay Film	Not required for temporary traffic control signs	

a. Must be printed according to the requirements including printer settings and profiles given in printer specific product bulletins.

8 Cutting Methods

The Sheeting may be cut into letters and shapes for direct applied copy. The Sheeting does not require edge sealing.

8.1 Plotter Cutting

The plotter cutting procedure used for Sheeting is similar to that used for typical beaded engineer grade sheeting. Start with the cutter settings typically used for beaded engineer grade sheeting and adjust as necessary. Slight adjustments in down force and knife depth may be required.

8.2 Premasking/Prespacing Markings

When premasking/prespacing with paper tape, use Prespacing Tape SCPM-2 or Application Tape SCPM-3. When premasking/prespacing with transparent tape, use Application Tape TPM-5.

8.3 Other Cutting Methods

Users are encouraged to evaluate cutting procedures for their own equipment and shop conditions. Sheeting may be hand cut, die cut, plotter cut, or guillotined multiple sheets at a time. The Sheeting may be cut into any desired shape, including cone sleeves. The cut edges of Sheeting do not require sealing. Details regarding cutting methods can be found in 3M Information Folder 1.10.

9 Fabrication Lines

The Sheeting manufacturing process results in repeating fabrication lines in the product, as illustrated in Figure 1. The lines repeat at the same interval throughout the roll. Fabrication lines may be noticeable in some situations but should not impact sign functionality on the road, either in daylight or at night, under typical use conditions.

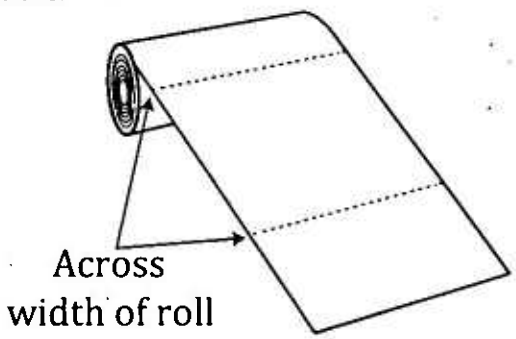

Figure 1. Fabrication lines.

10 Cleaning

Devices and signs that require cleaning should be flushed with water then washed with a detergent solution and soft bristle brush or sponge. Avoid pressure that may damage the device or sign face. Flush with water following washing. Do not use solvents to clean signs. See in 3M Information Folder 1.10 for further details.

11 Storage and Packaging

Sheeting should be stored in a cool, dry area, preferably at a temperature of 65–75 °F (18–24 °C) and a relative humidity of 30–50%, and be applied within two years of date of receipt. Rolls should be stored horizontally in their shipping cartons. Partially used rolls should be returned to their shipping cartons or suspended horizontally from rods or pipes through their cores. Unprocessed sheets should be stored flat. Refer to 3M Information Folder 1.11 for instructions on packing for storage and shipment.

11.1 Special Instructions for Regulated and Non-Regulated Signs (White Only)

Finished signs and applied blanks should be stored on edge. Processed sign faces must be protected with SCW 568 slipsheet paper. Place the glossy side of the slipsheet against the sign face. Double faced signs must have the glossy side of a slipsheet against each face of the sign.

Unmounted sign faces must be stored flat and interleaved with SCW 568 slipsheet, glossy side against the sign face.

Avoid banding, crating, or stacking signs. Package for shipment in accordance with commercially accepted standards to prevent movement and chafing. Store sign packages indoors on edges.

Panels and finished signs must remain dry during shipment and storage. If packaged signs become wet, unpack immediately and allow signs to dry. Refer to 3M Information Folder 1.11 for instructions on packing for storage and shipment.

12 Durability

The durability of a Sheeting application will depend upon substrate selection and preparation, compliance with recommended application procedures, geographic area, exposure conditions, and maintenance practices. Maximum durability can be expected in applications subject to vertical exposures on stationary objects when processed and applied to properly prepared substrates according to 3M recommendations available in 3M Information Folder 1.7. The user must determine the suitability of any substrate for its intended use. Exposure to severe or unusual conditions and applications to unprimed, excessively rough, or non-weather-resistant surfaces can reduce durability.

The durability statements contained herein do not constitute warranties of quality, life, or characteristics. Purchaser should perform appropriate tests to determine if Sheeting meets their performance requirements when applied to reboundable plastic substrates. Tests should incorporate plastic manufacturer's recommendations for impacting reboundable plastic traffic control devices.

12.1 Durability Considerations for Signing Applications

When 3M's system of matched component materials (Table 4) are used, depending upon the substrate selection and preparation, compliance with recommended application procedures, geographic area, exposure conditions, and maintenance.

Applications other than vertical exposure on stationary objects may reduce durability. Periodic sign inspection and regular sign replacement are strongly recommended.

12.2 Durability Considerations for Work Zone Construction Signs

Work zone construction signs are exposed to severe or unusual conditions and are considered to be nonstationary objects which could result in reduced durability compared to permanent sign applications.

12.3 Exposure Considerations

Exposure to severe or unusual conditions can shorten Sheeting lifetime. Signs in mountainous areas that are covered by snow for prolonged periods may also have reduced durability. Atmospheric conditions in certain geographic areas may have a negative effect on durability.

12.4 Custom Process Colors Considerations

Custom colors may have reduced durability compared to regulated traffic colors.

13 Health and Safety Information

Read all health hazard, precautionary, and first aid statements found in the Safety Data Sheets (SDS) and Article Information Sheets for important health, safety, and environmental information. To obtain SDSs and Article Information Sheets for 3M products, go to 3M.com/SDS, contact 3M by mail, or for urgent requests call 1-800-364-3577.

14 Warranty Information

14.1 3M Basic Warranty

3M warrants to the user that, at the time of shipment, the Sheeting will (a) be free of defects in materials and (b) manufacture and meet the specifications stated in this product bulletin ("3M Basic Warranty").

14.2 Exclusive Limited Remedy

If Sheeting is proven not to have met the 3M Basic Warranty on its shipment date, then a user's exclusive remedy, and 3M's sole obligation, at 3M's option, will be refund or replacement of the Sheeting.

14.3 Disclaimer

THE 3M WARRANTY IS MADE IN LIEU OF ALL OTHER WARRANTIES OR CONDITIONS, EXPRESS OR IMPLIED, INCLUDING BUT NOT LIMITED TO ANY IMPLIED WARRANTY OR CONDITION OF MERCHANTABILITY, OR FITNESS FOR A PARTICULAR PURPOSE, OR ANY IMPLIED WARRANTY ARISING OUT OF A COURSE OF DEALING OR OF PERFORMANCE, CUSTOM, OR USAGE OF TRADE.

14.4 Limitation of Liability

Except where prohibited by law, 3M SHALL NOT, UNDER ANY CIRCUMSTANCES, BE LIABLE TO USER, INCLUDING WITHOUT LIMITATION, TTC AND SIGN MANUFACTURER, FOR ANY DIRECT (EXCEPT FOR THE EXCLUSIVE LIMITED REMEDY PROVIDED IN SECTION 14.2), INDIRECT, SPECIAL, INCIDENTAL, OR CONSEQUENTIAL DAMAGES (INCLUDING BUT NOT LIMITED TO, LABOR, NON-3M MATERIAL CHARGES, LOSS OF PROFITS, REVENUE, BUSINESS OPPORTUNITY, OR GOODWILL) RESULTING FROM OR IN ANY WAY RELATED TO THE SHEETING, SERVICES, OR THIS BULLETIN. This limitation of liability applies regardless of the legal theory asserted including warranty, contract, negligence, or strict liability.

15 Other Product Information

Always confirm that you have the most current version of the applicable product bulletin, information folder, or other product information from 3M's Website at http://www.3M.com/roadsafety.

16 Literature References

3M IF 1.4	Instructions for Interstate Squeeze Roll Applicator
3M IF 1.5	Hand Application Instructions
3M IF 1.6	Hand Squeeze Roll Applicator
3M IF 1.7	Sign Base Surface Preparation
3M IF 1.8	Process Color Instructions

3M IF 1.10	Cutting, Premasking, and Prespacing
3M IF 1.11	Reflective Sheeting Sign Maintenance Management
3M IF 3.3	Procedures for Applying Reflective Sheeting to Reboundable Traffic Control Devices
3M PB 880I	3M™ Process Color Series 880I
3M PB 880N	3M™ Process Color Series 880N
3M PB 990	3M™ Process Color Series 990
3M PB 1170	3M™ ElectroCut™ Film Series 1170
8800UV	3M™ Piezo Inkjet Ink Series 8800UV
8900UV	3M™ Piezo Inkjet Series 8900UV Ink

ASTM Test Methods are available from ASTM International, West Conshohocken, PA.

For Information or Assistance
Call: 1-800-553-1380 In Canada Call:
1-800-3M HELPS (1-800-364-3577)

Internet: http://www.3M.com/roadsafety

3M, Science. Applied to Life., and ElectroCut are trademarks of 3M. Used under license in Canada.
All other trademarks are the property of their respective owners.

3M assumes no responsibility for any injury, loss, or damage arising out of the use of a product that is not of our manufacture. Where reference is made in literature to a commercially available product, made by another manufacturer, it shall be the user's responsibility to ascertain the precautionary measures for its use outlined by the manufacturer.

Important Notice
All statements, technical information and recommendations contained herein are based on tests we believe to be reliable at the time of this publication, but the accuracy or completeness thereof is not guaranteed, and the following is made in lieu of all warranties, or conditions express or implied. Seller's and manufacturer's only obligation shall be to replace such quantity of the product proved to be defective. Neither seller nor manufacturer shall be liable for any injury, loss or damage, direct, indirect, special, or consequential, arising out of the use of or the inability to use the product. Before using, user shall determine the suitability of the product for his/her intended use, and user assumes all risk and liability whatsoever in connection therewith. Statements or recommendations not contained herein shall have no force or effect unless in an agreement signed by officers of
seller and manufacturer.

3M

Commercial Branding and Transportation Division
3M Center, Building 0225-04-N-14
St. Paul, MN 55144-1000 USA

Phone 1-800-553-1380
Web 3M.com/roadsafety

Please recycle. Printed in USA © 3M
2023. All rights reserved.

Science.
Applied to Life.™

Commercial Branding and Transportation Division

3M™ Premium Protective Overlay Film Series 1160i

Product Bulletin Series 1160i
July 2023

Replaces Product Bulletin Series 1160i Dated April 2023

1 Description

3M™ Premium Protective Overlay Film Series 1160i ("**Film**") is a premium, transparent, UV-protective, graffiti- resistant overlay film that has been designed for use with 3M retroreflective sheetings, as part of 3M's system of matched components.

The Film fulfills the clear overlay requirement of the 3M™ MCS™ Warranty for Traffic and 3M™ MCS™ Warranty. See the 3M™ Sign Warranty Bulletin and imaging method specific warranty matrix listed at the end of this document for matched component requirements and warranty details.

The Film is compatible with the following 3M reflective sheetings:

- 3M™ Engineer Grade Prismatic Reflective Sheeting Series 3430
- 3M™ High Intensity Prismatic Reflective Sheeting Series 3930
- 3M™ High Intensity Prismatic Reflective Digital Sheeting Series 3930DS/3930UDS
- 3M™ Diamond Grade™ VIP Reflective Sheeting Series 3990
- 3M™ Diamond Grade™ DG3 Reflective Sheeting Series 4000
- 3M™ Diamond Grade™ DG3 Reflective Sheeting 4090T
- 3M™ Diamond Grade™ DG3 Reflective Digital Sheeting Series 4090DS/4000UDS
- 3M™ Advanced Flexible Engineer Grade Reflective Sheeting Series 7300

Many types of defacement can be cleaned from the Film to substantially restore the function and appearance of a sign.

Two Film configurations are available:

1160i: with premask

1160iA: without premask

Important: 3M application instructions for the Film are listed in Section 3 of this document. A complete understanding of all applicable instructions is highly recommended as they will help ensure quality Film applications. In addition, strict adherence to all applicable 3M procedures is required to receive a 3M™ MCS™ Warranty. Please contact your 3M Application Engineer with any questions.

2 Physical Properties

The Film is UV-protective, includes a fluoropolymer film top layer, physically protects a sign's imaged sheeting, and resists staining from common graffiti media including paints, permanent marker ink, lipstick, eggs, and stickers.

2.1 UV Protection

The Film absorbs light in the UV spectrum. Applying the Film to a sign that has been fabricated using 3M's system of matched components helps protect the underlying sign sheeting, and any copy or images printed on the sheeting, from degradation due to sunlight exposure. This helps maintain the legibility and retroreflectivity of signs exposed to sunlight.

2.2 Color and Transparency

The Film is clear and colorless. Applying the Film to a sign that has been fabricated using 3M's system of matched components will help maintain colorfastness of printed colors and help preserve the initial and retained minimum retroreflectivity performance of the sign's base sheeting.

When Film is applied according to 3M recommendations to a compatible microprismatic 3M retroreflective sheeting, as listed in Section 1, the Film will conform to the performance claims described in the 3M sheeting's product bulletin.

2.3 Graffiti Resistance

The Film provides a durable surface from which many types of graffiti can be cleaned using a variety of common techniques to substantially restore the original appearance and function of a vandalized sign.

The Film, when used according to all applicable 3M procedures, can be expected to provide the same effective field performance as the sheeting to which it is applied. Refer to the relevant 3M product bulletins for performance specifications. The Film has been designed to physically protect a sign's imaged sheeting and enables removal of staining from the following common graffiti types.

- Paints
- Lipstick
- Permanent marker ink
- Eggs
- Stickers

The Film allows signs to be cleaned such that the function and appearance of the original signs are substantially restored when recommended or conventional cleaners are used. The Film does not prevent defacement.

2.4 Adhesive and Liner

The Film utilizes a clear, transparent, pressure sensitive adhesive and has an easily removable white paper liner.

2.5 Premask

To facilitate handling, 1160i Film is provided with a white paper premask which is peeled away after application. After removing the premask, re-roll the sign through the laminator to ensure good adhesion. 1160iA does not include premask.

3 Application

3.1 Use Conditions Before Overlaying Film

a. Air and substrate temperatures must be 60 °F (16 °C) or higher.
b. Sign must be clean, and any screen-printed inks present must be completely dry.

3.2 Equipment

a. Mechanical squeeze roll applicator – See 3M Information Folder 1.4
b. Mechanical squeeze roll applicator with heated roller (required for UV-printed signs)
c. Hand squeeze roll applicator – See 3M Information Folder 1.6.
d. Flatbed applicator - See 3M Information Folder 1.6.

A laminating roller with a hardness of 35 durometer (Shore A) should be used to help minimize tenting of the Film over direct apply copy or 3M™ ElectroCut™ Film Series 1170.

Note: Application of 1160iA Film is best accomplished using a mechanical squeeze roll applicator. Use extra care when handling 1160iA since it is not supported by premask.

3.3 Premasked Film (1160i)

Remove the premask AFTER the Film has been applied to the sign by lifting an edge of the premask with a fingernail or knife, then pulling the premask back over itself at a very sharp angle using steady, even tension.

Note: Edge trim BEFORE removing premask.

WARNINGS:

- Do not allow premask to be exposed to moisture.
- Premask must be removed before storing or shipping signs.

3.4 Trimming

a. Use a sharp cutting blade to trim the Film along sign edges. It may be helpful to grasp the edge of the unsupported overhanging Film to create tension on that portion of the Film while trimming.
b. The overhanging portion of the Film on the top edge of the sign may be smoothly folded over and adhered to the back edge of the sign to help reduce water or dirt intrusion along the top edge of the sign. The back side of the sign must be properly cleaned before the Film is applied.

3.5 Additional Processing

Do not apply any inks, films, or sheetings as copy or images over the Film. The Film has been designed to resist adhesion of such markings.

3.6 Splices

Apply Film to sign as a single piece. Do not overlap splice Film.

4 Cleaning

To remove normal dirt accumulation from Film, use a soft cloth with a mild detergent and water solution, followed by a thorough water rinse.

To remove more stubborn contamination, such as graffiti, use commercially available cleaning systems recommended for this purpose. **Before using any cleaning tools or compounds, read and carefully follow all applicable product use and safety instructions. Test the cleaner on a small and inconspicuous area of the sign to determine the cleaner's suitability and whether it will damage or affect the performance of the sign.** Do not use cleaners containing strong polar solvents, such as ketones (acetone, methyl ethyl ketone), methylene chloride (dichloromethane), or other chlorinated solvents.

3M™ Industrial Cleaner Citrus Base can be used to effectively remove many common types of defacement, such as permanent marker, eggs, and stickers. Isopropyl alcohol (IPA), or a 50/50 blend of IPA and xylene, can effectively remove many paints. Commercially available cleaners can also be highly effective. Although the Film is resistant to strong solvents, prolonged exposure to solvents can result in permanent sign damage.

A pressure sensitive tape, such as 3M™ Premasking Tape SCPM-3 or common masking tape, can sometimes be used to effectively remove some kinds of paints and stickers. Simply roll or squeegee the tape firmly over the defaced area, then carefully lift away the tape, and any defacement materials stuck to it, from the overlay. A small amount of residual defacement material may remain and require the use of a cleaning solution, as described above, to remove remnants the tape method did not remove adequately. The sign must be completely dry for this method to be effective.

Always use soft cleaning cloths. Do not use abrasive brushes, scouring pads, or implements to scrape defacement materials from a sign. Scraping and abrasive methods are likely to cause permanent sign damage.

WARNING:

The use of sharp implements, abrasive devices, or certain types of strong or corrosive chemicals to either deface or clean a sign can result in permanent damage to the Film and the underlying sign, severely reducing the sign's performance. The Film is not intended to protect signs from impact, cutting, gouging, strong chemicals, or pulling off the Film from signs. Use of a flame, other high-heat source, or other extreme abuse of the Film or signs is likely to severely and permanently reduce or destroy the sign's effectiveness.

5 Shelf-Life, Processing, Storage, and Packaging

Use within two years of date of manufacture.

Store film in a cool, dry area, preferably at a temperature of 65–75 °F (18–24 °C) and a relative humidity of 30–50%.

Follow recommendations given in 3M Information Folder 1.11 regarding proper storage, packaging, handling, shipping, and installation of finished signs.

6 Environmental, Health, and Safety

Read all health hazard, precautionary, and first aid statements found in the Safety Data Sheets ("**SDS**"), Article Information Sheets, and products labels of any materials for important health, safety, and environmental information prior to handling or use. For any cleaning and/or chemical products, consult federal, state and local air quality regulations that may regulate chemical product usages or restrict use. To obtain SDSs and Article Information Sheets for 3M products, go to 3M.com/SDS, contact 3M by mail, or for urgent requests call 1-800- 364-3577.

7 Warranty Information

7.1 3M Standard Warranty

The Film is warranted ("**3M Standard Warranty**") to be free of defects in materials and manufacture at the time of shipment and to meet the description stated in this product bulletin. If the Film is proven not to have met the 3M Standard Warranty on their shipment date, then a buyer's exclusive remedy, and 3M's sole obligation, at 3M's option, will be refund or replacement of the Film.

7.2 3M™ MCS™ Warranty and 3M™ MCS™ Warranty for Traffic

For warranty information, please refer to the 3M™ Sign Warranty Bulletin.

7.3 Disclaimer

THE 3M WARRANTY IS MADE IN LIEU OF ALL OTHER WARRANTIES OR CONDITIONS, EXPRESS OR IMPLIED, INCLUDING BUT NOT LIMITED TO ANY IMPLIED WARRANTY OR CONDITION OF MERCHANTABILITY, OR FITNESS FOR A PARTICULAR PURPOSE, OR ANY IMPLIED WARRANTY ARISING OUT OF A COURSE OF DEALING OR OF PERFORMANCE, CUSTOM, OR USAGE OF TRADE.

7.4 Limitation of Liability

Except for the limited remedy stated above, and except where prohibited by law, 3M will not be liable for any loss or damage arising from the Film or any 3M product, whether direct, indirect, special, incidental, or consequential damages (including but not limited to lost profits, business, or revenue in any way), regardless of the legal theory asserted including warranty, contract, negligence, or strict liability.

8 Other Product Information

Always confirm that you have the most current version of the applicable product bulletin, information folder, or other product information from 3M's Website at http://www.3M.com/roadsafety.

9 Literature References

3M IF 1.4	Instructions for Interstate Squeeze Roll Applicator
3M IF 1.5	Hand Application Instructions
3M IF 1.6	Hand Squeeze Roll Applicator
3M IF 1.11	Sign Maintenance Management
3M PB 3430	3M™ Engineer Grade Prismatic Reflective Sheeting Series 3430
3M PB 3930	3M™ High Intensity Prismatic Reflective Sheeting Series 3930
3M PB 3930DS	3M™ High Intensity Prismatic Reflective Digital Sheeting Series 3930DS
3M PB 3930UDS	3M™ High Intensity Prismatic Reflective Digital Sheeting Series 3930UDS
3M PB 3990	3M™ Diamond Grade™ VIP Reflective Sheeting Series 3990
3M PB 4000	3M™ Diamond Grade™ DG³ Prismatic Reflective Sheeting Series 4000
3M PB 4000DS	3M™ Diamond Grade DG³ Prismatic Digital Sheeting Series 4000DS
3M PB 4000UDS	3M™ Diamond Grade™ DG³ Prismatic Digital Sheeting Series 4000UDS
3M PB 7300	3M™Advanced Flexible Engineer Grade Reflective Sheeting Series 7300
3M PB 4090T	3M™ Diamond Grade™ Translucent DG³ Reflective Sheeting 4090T
3M PB 3924SUDS	3M™ Diamond Grade™ Fluorescent Work Zone Digital Sheeting Series 3924SUDS

3M™ Sign Warranty Bulletin
3M™ MCS™ Warranty Matrix for Durst 163TS and 163TS-HS Printers
3M™ MCS™ Warranty for Traffic Matrix for Durst 163TS and 163TS-HS Printers
3M™ MCS™ Warranty Matrix for EFI™ H1625-RS Printers
3M™ MCS™ Warranty for Traffic Matrix for EFI™ 1625-RS Printers
3M™ MCS™ Warranty Matrix for HP Latex 360/365 Printers
3M™ MCS™ Warranty for Traffic Matrix for HP Latex 360/365 Printers
3M™ MCS™ Warranty Matrix for HP Latex 700/800 Series Printers
3M™ MCS™ Warranty for Traffic Matrix for HP Latex 700/800 Series Printers

3M™ MCS™ Warranty Matrix for HP Latex 1500 Printer
3M™ MCS™ Warranty for Traffic Matrix for HP Latex 1500 Printer
3M™ MCS™ Warranty for Traffic Matrix for ElectroCut™ Film Series 1170
3M™ MCS™ Warranty for Traffic Matrix for Screen Printed Signs
3M™ MCS™ Warranty for Traffic Matrix for Unimaged 3M™ Retroreflective Sheeting

For Information or Assistance
Call: 1-800-553-1380
In Canada Call:
1-800-3M HELPS (1-800-364-3577)

Internet:

http://www.3M.com/roadsafety

3M, Science. Applied to Life., and Diamond Grade, MCS, and ElectroCut are trademarks of 3M. Used under license in Canada. All other trademarks are the property of their respective owners.

3M assumes no responsibility for any injury, loss, or damage arising out of the use of a product that is not of our manufacture. Where reference is made in literature to a commercially available product, made by another manufacturer, it shall be the user's responsibility to ascertain the precautionary measures for its use outlined by the manufacturer.

Important Notice

All statements, technical information and recommendations contained herein are based on tests we believe to be reliable at the time of this publication, but the accuracy or completeness thereof is not guaranteed, and the following is made in lieu of all warranties, or conditions express or implied. Seller's and manufacturer's only obligation shall be to replace such quantity of the product proved to be defective. Neither seller nor manufacturer shall be liable for any injury, loss, or damage, direct, indirect, special, or consequential, arising out of the use of or the inability to use the product. Before using, user shall determine the suitability of the product for his/her intended use, and user assumes all risk and liability whatsoever in connection therewith. Statements or recommendations not contained herein shall have no force or effect unless in an agreement signed by officers of seller and manufacturer.

3M

Commercial Branding and Transportation
3M Center, Building 223-3N-30
St. Paul, MN 55144-1000 USA

Phone 1-800-553-1380
Web 3M.com/roadsafety

Please recycle. Printed in USA © 3M 2023. All rights reserved. Electronic Only

Science.
Applied to Life.™

Commercial Branding and Transportation Division

3M™ ElectroCut™ Film Series 1170

Product Bulletin Series 1170 (not including 1170C clear)
July 2023
For U.S.A. and Canada

Replaces Product Bulletin 1170 Dated November 2022

1 Description

3M™ ElectroCut™ Film Series 1170 ("Film") is a durable, transparent, acrylic film coated with a transparent, pressure-sensitive adhesive that is protected by a removable liner that has been designed to enable kiss-cutting with electronic cutting machines. The Film can be used instead of silk screened inks to provide transparent colored background copy for retroreflective street name signs and other traffic control signs.

The Film is available in the colors listed in Table 1.

Table 1. Product codes by color.1

Color	Product Code
Yellow	1171
Blue	1175
Green	1177
Black (Opaque)	1178
Brown	1179

The Film is part of 3M's system of matched components for signing and has been designed for use in permanent signing constructions. The Film's clear pressure-sensitive adhesive is compatible with the following white 3M reflective sheetings:

- 3M™ Engineer Grade Prismatic Reflective Sheeting 3430
- 3M™ Engineer Grade Reflective Sheeting 3290
- 3M™ High Intensity Prismatic Reflective Sheeting 3930
- 3M™ Prismatic Reflective Sheeting 3940
- 3M™ Diamond Grade™ VIP Reflective Sheeting 3990
- 3M™ Diamond Grade™ DG^3 Reflective Sheeting 4000
- 3M™ Diamond Grade™ Translucent DG^3 Reflective Sheeting 4090T
- 3M™ Advanced Flexible Engineer Grade Reflective Sheeting 7310

Various Film widths are available for use in the fabrication of single sign panels up to 48 inches wide. For single panel signs requiring more than one piece of Film or multipanel signs, such as guide signs, be sure to follow the 3M color matching procedures described in 3M Information Folder 1.10 to achieve satisfactory results. For best color uniformity on colored multipanel signs, all panels must be made from the same lot of Film.

2 Specifications

When colored Film is applied to a compatible 3M white sheeting (see section 1), it will meet the applicable ASTM D4956 specifications of the equivalent integrally colored sheeting. See Section 9 Literature References for sheeting information.

3 Film Liner

The Film includes a semi-transparent release liner that has been designed to facilitate cutting and the removal of the film weed after cutting.

4 Storage

Store in a cool, dry area at a temperature of 65–75 °F (18–24 °C) and a relative humidity of 30–50%. Use within 2 years of date of manufacture.

5 Fabrication - Cutting and Application Procedures

Important Note: Read the manufacturer's operating manual carefully and follow all prescribed procedures when using cutting equipment.

1 Adjust knife pressure to cut cleanly through Film and slightly score the liner. A 30° blade is recommended.
2 Use a clean cutting blade. Remove adhesive build-up using a soft cloth dampened with mineral spirits, isopropyl alcohol, or 3M™ Citrus Base Cleaner.
3 Avoid flexing Film excessively when handling it. Flexing the Film may cause it to release from the liner.
4 After cutting is complete, lay sheets flat, face to face, back to back. Always store sheets of Film in this manner until they have been weeded and transfer tape has been applied to the sheeting.
5 Use a blunt edged stripping tool that has been designed for weeding films; do not use a sharp edge stripping tool.
6 Once weeding has been completed, store Film sheets flat, face to face and back to back until transfer tape has been applied.
7 TPM-5 Clear Transfer Tape is recommended for best results. SCPM-3 Application Tape may be used on small signs. Other transfer tapes are not recommended.
8 Transfer tape can be applied either by hand using a plastic squeegee or using a hand squeeze roll applicator (HSRA). When applying transfer tape by hand, always squeegee from the center to the edge in both directions. When applying transfer tape with a HSRA, set air pressure to 30 psi to avoid stretching the premask during application, cut "lead" edge squarely and feed it into the nip carefully to avoid wrinkling the Film.
9 The Film may be applied to sheeting either before or after the sheeting has been applied to the substrate. For best results, use a HSRA. The "split liner method" – start in the middle of the sheet and remove half the liner - can be used to help ensure proper alignment.
10 After Film and sheeting have been applied, remove the transfer tape by gently pulling it at as low of an angle as possible.
11 **IMPORTANT!** once the transfer tape has been removed, reroll the sign through the laminator to ensure good adhesion.
12 Excess or overhanging Film should be trimmed using a sharp utility knife held at an angle of 30° relative to the substrate.
13 Cut Film at panel seams.

5.1 Splices

The Film must be butt spliced when more than one piece is used on a single piece of substrate. Film pieces should not touch one another. This is to prevent the buckling that can occur as Film expands under extreme temperature and humidity conditions.

6 Health and Safety Information

Read all health hazard, precautionary, and first aid statements found in the Safety Data Sheets (SDS) and Article Information Sheets for important health, safety and environmental information. To obtain SDSs and Article Information Sheets for 3M products, go to 3M.com/SDS, contact 3M by mail, or for urgent requests call 1-800-364-3577.

7 Warranty Information

7.1 3M Standard Warranty

3M has no control over application methods or the quality of the surface to which materials are applied. Therefore, 3M's warranty for Film shall be limited to the quality of materials supplied.

The Film is warranted (**"3M Standard Warranty"**) to be free of defects in materials and manufacture at the time of shipment and to meet the specifications stated in this product bulletin. If the Film is proven not to have met the 3M Standard Warranty on their shipment date, then a buyer's exclusive remedy, and 3M's sole obligation, at 3M's option, will be refund or replacement of the Film.

7.2 3M™ MCS™ Warranty, 3M™ MCS™ Warranty for Traffic, and Limited Remedy

For the 3M™ MCS™ Warranty, 3M™ MCS™ Warranty for Traffic, and limited remedies applicable to the Film, refer to the 3M Sign Warranty Bulletin.

7.3 Disclaimer

THE 3M WARRANTY IS MADE IN LIEU OF ALL OTHER WARRANTIES OR CONDITIONS, EXPRESS OR IMPLIED, INCLUDING BUT NOT LIMITED TO ANY IMPLIED WARRANTY OR CONDITION OF MERCHANTABILITY, OR FITNESS FOR A PARTICULAR PURPOSE, OR ANY IMPLIED WARRANTY ARISING OUT OF A COURSE OF DEALING OR OF PERFORMANCE, CUSTOM, OR USAGE OF TRADE.

7.4 Limitation of Liability

Except for the limited remedy stated above, and except where prohibited by law, 3M will not be liable for any loss or damage arising from the Signs or any 3M product, whether direct, indirect, special, incidental, or consequential damages (including but not limited to lost profits, business, or revenue in any way), regardless of the legal theory asserted including warranty, contract, negligence, or strict liability.

8 Other Product Information

Always confirm that you have the most current version of the applicable product bulletin, information folder, or other product information from 3M's website at http://www.3M.com/roadsafety.

9 Literature References

3M IF 1.10	Cutting, Premasking, and Prespacing
3M PB 3290	3M™ Engineer Grade Reflective Sheeting Series 3200 and 3M™ Utility Grade Reflective Sheeting Series 5200
3M PB 3430	Engineer Grade Prismatic Reflective Sheeting Series 3430
3M PB 3930	3M™ High Intensity Prismatic Reflective Sheeting Series 3930
3M PB 3930DS	3M™ High Intensity Prismatic Reflective Digital Sheeting Series 3930DS
3M PB 3990	3M™ Diamond Grade™ VIP Reflective Sheeting Visual Impact Performance (VIP) Series 3990
3M PB 4000	3M™ Diamond Grade™ DG^3 Reflective Sheeting Series 4000
3M PB 4000DS	3M™ Diamond Grade™ DG^3 Prismatic Reflective Digital Sheeting Series 4000DS
3M PB 4090T	Diamond Grade™ Translucent DG^3 Reflective Sheeting Series 4090T

3M Sign Warranty Bulletin

ASTM Test Methods are available from ASTM International, West Conshohocken, PA.

For Information or Assistance
Call: 1-800-553-1380
In Canada Call:
1-800-3M HELPS (1-800-364-3577)

Internet:
http://www.3M.com/roadsafety

3M, 3M Science. Applied to Life., and Stamark are trademarks of 3M. Used under license in Canada.
All other trademarks are the property of their respective owners.

3M assumes no responsibility for any injury, loss, or damage arising out of the use of a product that is not of our manufacture. Where reference is made in literature to a commercially available product, made by another manufacturer, it shall be the user's responsibility to ascertain the precautionary measures for its use outlined by the manufacturer.

Important Notice
All statements, technical information and recommendations contained herein are based on tests we believe to be reliable at the time of this publication, but the accuracy or completeness thereof is not guaranteed, and the following is made in lieu of all warranties, or conditions express or implied. Seller's and manufacturer's only obligation shall be to replace such quantity of the product proved to be defective. Neither seller nor manufacturer shall be liable for any injury, loss, or damage, direct, indirect, special, or consequential, arising out of the use of or the inability to use the product. Before using, user shall determine the suitability of the product for his/her intended use, and user assumes all risk and liability whatsoever in connection therewith. Statements or recommendations not contained herein shall have no force or effect unless in an agreement signed by officers of seller and manufacturer.

3M

Commercial Branding and Transportation
3M Center, Building 223-3N-30
St. Paul, MN 55144-1000 USA

Phone 1-800-553-1380
Web 3M.com/roadsafety

Please recycle. Printed in USA © 3M 2023.
All rights reserved. Electronic only

3M Process Color

Series 880I

Product Bulletin 880I **April 2011**

Replaces PB 880 dated July 2010

Description

3M™ Process Color Series 880I is designed as part of the matched component system for application by screen processing. 3M process color series 880I can be screen processed on both applied and unapplied 3M™ Engineer Grade Prismatic Reflective Sheeting Series 3430, 3M™ High Intensity Prismatic Reflective Sheeting Series 3930, 3M™ Diamond Grade™ VIP Reflective Sheeting Series 3990 and 3M™ Diamond Grade™ DG³ Reflective Sheeting Series 4000. Please reference the appropriate product bulletin. Application to other grades or types of sheetings or surfaces is not recommended.

Colors

Series 880I process color is intended for use in the production of traffic control signs. Signs made using these materials will have a similar appearance when viewed from a vehicle in daylight or at night.

The following 880I series process colors are applied by screen processing:

880I Toner	887I Brown
882I Traffic Sign Red	888I Green
883I Blue	891I Thinner
884I Yellow	893I Violet
885I Black (Opaque)	894I Lemon Yellow
886I Orange	895I Magenta

Series 880I process colors should not be blended with any other series process colors produced by 3M or any other manufacturer. 3M assumes no responsibility for premature failure of sign face legends that have been processed with non-3M process colors.

Screen Processing

1. Equipment and Set-up

Proper color and durability is achieved by using a high grade polyester, monofilament screen fabric mesh size P.E. 157. Other size screen fabric mesh sizes do not produce satisfactory color and durability and are not recommended. Screen processing should be accomplished using the off-contact screening method. Direct contact screen printing should not be used. Refer to Information Folder 1.8 for the proper techniques of off-contact screen processing. Be sure that screens, sheeting, plus screening and drying areas are dust, dirt, and lint free.

2. Coverage

Transparent process colors screened through a P.E. 157 screen fabric will cover approximately 1200 sq. ft. per gallon. Coverage will be affected by the extent of thinning, equipment used, and application procedure.

3. Mixing and Thinning

It is important that the colors and sheetings be brought to normal ambient room temperature and humidity of the screen processing area before processing. Thinning should not be necessary, except to replace solvents lost by evaporation during processing. Thin sparingly using 3M™ Thinner of the same series as the process colors. Do not use extenders, drying agents, or other materials as they will adversely affect performance life. Do not mix with any other series of process colors or clears produced by 3M or any other manufacturers. For detailed instructions, refer to Information Folder 1.8.

4. **Clear Coating**
   3M™ Process Color Series 880I transparent or opaque colors **need not** be clear coated.

Edge Sealing

Edge sealing is not recommended.

Air Drying

Processed sheeting for air drying must be placed on open racks to allow adequate air circulation. High volume fans must be directed through the racks. Drying times will be increased by high humidity, low temperature, poor air circulation, heavy color coat, and excessive thinning. Addition of drying agents is not recommended. Sheeting processed with Series 880I colors must be air dried for a minimum of 3 hours per color.

Oven Drying

Processed sheeting for oven dried must be placed on open racks individually with sufficient open space for unobstructed air flow.

	Flow Out Time (1)	Bake Each Color (2)	Bake Final Color (2)	Oven Temp. (3)
Series 880I	10 min. (with fans)	30 min.	30 min.	105° ± 5°F (41° ± 3°C)

1. Before placing in the oven, rack individually to permit proper flow out of color.
2. Excessive baking can deaden adhesive.
3. Oven must provide horizontal air flow.

Conveyor Drying

Signs to be dried must be placed to allow unobstructed air flow. The conveyor speed must be able to be adjusted to meet the requirements for flow-out times and heat. Ifi mmediate packaging is planned, a cooling zone capable of cooling the sign faces to room temperature of 65°-75°F (18°-24°C) is needed. Typically, the cooling zone should be the same length as the heating zone. The temperatures stated are at the sign face and not the oven temperatures. (See Table 1).

Table 1

Series 880N		
Flow-Out Time	Between Colors	Final Color
30 seconds	2 minutes @ 185°F (65°C)	2 minutes @ 185°F (65°C)

Slipsheeting and Packaging

3M™ screen processed signs must be protected with SCW 568 Slipsheet Paper. Place the glossy side of the slipsheeting against the sign face and pad the face with closed cell packaging foam. Double faced signs must have the glossy side of the slipsheet against each face of the sign. Unmounted screened faces must be stored flat and interleaved with SCW 568 slipsheet, glossy side against the sign face. Packages of finished sign faces must include sufficient nylon washers for mounting.

Storage

Series 880I process color should be stored at general warehouse storage (16°C/60°F to 27°C/80°F). The color has a shelf life of 12 months from customer receipt.

Troubleshooting Tips

The following troubleshooting tips are suggestions to minimize the potential for cracking of sheeting after screening with Series 880I process colors:

1. Screen applied sheets rather than unapplied sheets.
2. Use piggy-back box fans to provide air flow through entire drying rack. Have these fans running from the time the first sheet or sign is racked until 3 hours after the last sheet or sign is racked.
3. When drying unapplied sheets, use a smooth cardboard underliner on the drying rack shelves.
4. Avoid flexing sheeting when color is wet.
5. Avoid adding excessive thinner to the color.
6. Use every other shelf on drying racks.
7. Avoid use of solvents when cleaning sheeting prior to screening. If necessary, use a tack cloth to clean sheeting.

Environmental, Health and Safety Information

Read all health hazard, precautionary and first aid statements found in the Material Safety Data Sheet, and/or product label of chemicals prior to handling or use.

Consult federal, state and local air quality regulations that may regulate or restrict product use.

General Performance Considerations

3M process colors series 880I which is processed according to 3M recommendations can be expected to provide durability for traffic sign uses comparable to that of the 3M sheeting on which they are applied, with the following exceptions: Process Color 886I Orange processed on white reflective sheeting will provide 3 year durability; 894I Lemon Yellow and 895I Magenta will provide 5 year durability; 893I Violet and 887I Brown will provide 7 year durability. Durability will be substantially reduced by toning the colors. The durability of sheeting or screen processed sheeting exposed in any position other than vertical or near vertical may be significantly reduced. The durability statements expressed herein do not apply for the use of sheeting for vehicle markings. Contact your 3M sales representative to clarify the durability of such applications. See sheeting product bulletins for specific warranty details.

Special Color Formulation Warranty Statement

3M has developed specific colors within 3M™ Process Color Series 880I that have been evaluated for their durability (in terms of retained translucency and resistance to fade) based on actual outdoor weathering. Customers who purchase specially blended colors from 3M or who blend these colors themselves can expect that the blended colors will last as long as the component colors would last individually. Many blended process colors will be durable for periods up to 10 years. However, since blended formulations often contain individual component colors that have differing expected durability, users will experience color shifts over time. More rapid color shift will occur with special colors that contain a higher percentage of shorter durability colors. In addition, toners significantly reduce durability. For these reasons, 3M cannot make a specific durability statement for any special colors.

Literature Reference

PB 3430	3M™ Engineer Grade Prismatic Reflective Sheeting Series 3430
PB 3930	3M™ High Intensity Prismatic Reflective Sheeting
PB 3990	3M™ Diamond Grade™ VIP Reflective Sheeting Series 3990
PB 4000	3M™ Diamond Grade™ DG³ Reflective Sheeting
IF 1.4	Instructions for Operation of Interstate Squeeze Roll Applicator
IF 1.5	Hand Application Instructions for 3M™ Reflective Sheeting and
IF 1.6	Hand Squeeze Roll Applicators
IF 1.7	Sign Base Surface Preparation for 3M™ Reflective Sheeting Application
IF 1.8	Application of 3M™ Process Color 700, 800 and 990 on 3M™ Reflective Sheetings
IF 1.11	Reflective Sheeting Sign Maintenance Management

FOR INFORMATION OR ASSISTANCE CALL:
1-800-553-1380

IN CANADA CALL:
1-800-265-1840

Internet:
www.3M.com/tss

3M assumes no responsibility for any injury, loss or damage arising out of the use of a product that is not of our manufacture. Where reference is made in literature to a commercially available product, made by another manufacturer, it shall be the user's responsibility to ascertain the precautionary measures for its use outlined by the manufacturer.

Important Notice

All statements, technical information and recommendations contained herein are based on tests we believe to be reliable, but the accuracy or completeness thereof is not guaranteed, and the following is made in lieu of all warranties, or conditions express or implied. Seller's and manufacturer's only obligation shall be to replace such quantity of the product proved to be defective. Neither seller nor manufacturer shall be liable for any injury, loss or damage, direct, special or consequential, arising out of the use of or the inability to use the product. Before using, user shall determine the suitability of the product for his/her intended use, and user assumes all risk and liability whatsoever in connection therewith. Statements or recommendations not contained herein shall have no force or effect unless in an agreement signed by officers of seller and manufacturer.

3M and Diamond Grade are trademarks of 3M. Used under license in Canada.

3M

Traffic Safety Systems Division
3M Center, Building 235-3A-09
St. Paul, MN 55144-1000
1-800-553-1380
www.3M.com/tss

3M Canada Company
P.O. Box 5757
London, Ontario N6A 4T1
1-800-3MHELPS

3M México, S.A. de C.V.
Av. Santa Fe No. 55
Col. Santa Fe, Del. Alvaro Obregón
México, D.F. 01210

Please recycle.
© 3M 2011. All rights reserved.
Bolger 11040768
Electronic Only

3M

Process Color

Series 880N

Product Bulletin 880N **January 2013**

Replaces PB 880N dated July 2010

Description

3M™ Process Color Series 880N is designed as part of the matched component system for application by screen processing. 3M process color series 880N can be screen processed on both applied and unapplied 3M™ Engineer Grade Prismatic Reflective Sheeting Series 3430, 3M™ High Intensity Prismatic Reflective Sheeting Series 3930, 3M™ Diamond Grade™ VIP Reflective Sheeting Series 3990 and 3M™ Diamond Grade™ DG³ Reflective Sheeting Series 4400. Please reference the appropriate product bulletin. Application to other grades or types of sheetings or surfaces is not recommended.

Colors

Signs made using these materials will have a similar appearance when viewed from a vehicle in daylight or at night. The following 880N series process colors are applied by screen processing:

880N Toner
882N Traffic Sign Red Process Color
883N Blue Process Color
884N Yellow Process Color
885N Black Process Color
886N Orange Process Color
887N Brown Process Color
888N Green Process Color
892 F low Additive
711N Thinner

Series 880N process colors should not be blended with any other series process colors produced by 3M or any other manufacturer. 3M assumes no responsibility for premature failure of sign face legends that have been processed with non-3M process colors.

Screen Processing

1. Equipment and Set-up

Proper color and durability is achieved by using a high grade polyester, monofilament screen fabric mesh size P.E. 157. Other screen fabric mesh sizes do not produce satisfactory color or durability and are not recommended. Screen processing should be accomplished using the off-contact screening method. Direct contact screen printing should not be used. Refer to Information Folder 1.8 for the proper techniques of off-contact screen processing. Be sure that screens, sheeting, plus screening and drying areas are dust, dirt, and lint free.

2. Coverage

Transparent process colors screened through a P.E. 157 screen fabric will cover approximately 1200 sq. ft. per gallon. Coverage will be affected by the extent of thinning, equipment used, and application procedure. **Do not reclaim any unused ink that remains in the screen. Dispose of appropriately.**

3. Mixing

Process colors must be mixed prior to use. Shake for at least one minute by paint shaker or three minutes by hand. For best results, after shaking, mix mechanically for at least five minutes at 1000 - 2000 RPM with the equivalent of a 3 blade, 2 inch (5.1 cm) diameter propeller powered by an air-driven motor. Let stand for one hour. Cover as soon as possible after mixing and during use.

4. Thinning and Flow Additive

Series 880N process colors are formulated to be at screening viscosity directly out of the can. If a lower viscosity process color is needed for screening, there are two choices for thinners. 3M™ 711N thinner is a general purpose thinner that will work in most applications. 3M™ CGS-80 thinner/retarder is a more specialized thinner that will slightly increase drying times and should be used if drying in the screen is a problem.

Thinners should be added sparingly and only to a point that results in a good quality screened image. Over-thinning may result in screening errors such as non-wets, or "fish" eyes. A good general rule is to add thinner until the color lifted with the stationary propeller "piles" just slightly, on the surface as it flows back into the container

892 Flow Additive can be used to improve flow characteristics. Refer to Information Folder 1.8.

NOTE: If at all possible, the mixing and thinning should be done the night before and then just before screening, hand mix with a spatula.

CAUTION: Do not retard drying (use CGS-80) on unmounted sheeting in cold weather (< 30°F) or dry humidity (< 30 % RH), as cracking may occur. Use 3M™ 711N thinner ONLY in these conditions.

5. Clear Coating
Series 880N transparent or opaque colors need not be clear coated.

Edge Sealing

Edge sealing is not recommended.

Air Drying

Air drying is best done at temperatures of 60-100°F (15-38°C) and relative humidity of 20-50%. Drying rates may be slowed by high humidity, low temperature, poor air circulation, a too heavy coat of color, or excessive thinning. [Exhaust ventilation must also be provided in the screening or drying room to prevent a build up of solvent vapors which may affect drying or create a health or re hazard.] Addition of drying agents is not recommended since they adversely affect color adhesion and durability.

NOTE: If screen printed materials are not sufficiently dried, blocking, sticking or severe surface impressions of the screened images may occur when stored or packaged for shipment. If adequate drying is in question, the following steps are recommended to determine if the image has been sufficiently dried.

1. Press a dried screen printed area face to another dried screen printed face with moderate hand pressure.

2. Place the touched area close to your ear and separate by pulling apart. If the process color is dry, there will be a slightly discernible or no sound heard. If the color is not adequately dried a crackling sound will be heard. The louder the sound the more additional drying will be required.

It is imperative that the newly processed sheets be placed on racks with adequate air flow (approximately 125 lin. ft./min. minimum) through the racks while they are being filled, so as to rapidly remove any exhaust solvents. Follow these procedures:

1. Signs should be racked with unobstructed space for air flow between layers.

2. Fans should be placed 4-6 ft. in front of and air directed through all parts of the racks with horizontal air flow between the layers. Two fans per rack are required for most commercial racks.

3. Racks should not be placed in a corner or near a wall where the air flow or exhaust is restricted.

Minimum Dry Times
Between Colors 2 hrs.
Before Packaging 3 hrs.

Oven Drying
Processed sheeting must be racked individually with sufficient unobstructed air flow space between layers and at the end of rack. Ovens must be designed to provide adequate horizontal air flow through the oven (125 lin. ft./min. minimum). The freshly screened processed sign must be allowed to flow-out (air dry with fans) before it is placed in the oven. (See Table 1).

Table 1

Diamond Grade™ and 3M™ High Intensity Grade Sheeting				
	Flow-Out Times (1)	Bake Each Color (2)	Bake Final Color (2)	Oven Temp
880N Series	10 min.	30 min.	30 min.	105°+ 5°F (41° + 3°C)
1. Before placing in oven, rack individually to permit flow-out of color.				
2. Excessive baking can deaden adhesive.				
3. Oven must be provided with horizontal air flow of adequate volume.				

Conveyor Drying

Signs to be dried must be placed to allow unobstructed air flow. The conveyor speed must be able to be adjusted to meet the requirements for flow-out times and heat. If immediate packaging is planned, a cooling zone capable of cooling the sign faces to room temperature of 65°-75°F (18°-24°C) is needed. Typically, the cooling zone should be the same length as the heating zone. The temperatures stated are at the sign face and not the oven temperatures. (See Table 2).

Table 2

Series 880N		
Flow-Out Time	Between Colors	Final Color
30 seconds	2 minutes @ 185°F (65°C)	2 minutes @ 185°F (65°C)

Slipsheeting and Packaging

Screen processed signs must be protected with SCW 568 slipsheet paper. Place the glossy side of the slipsheeting against the sign face and pad the face with closed cell packaging foam. Double faced signs must have the glossy side of the slipsheet against each face of the sign.

Unmounted screened faces must be stored at and interleaved with SCW 568 slipsheet, glossy side against the sign face. Packages of finished sign faces must include sufficient nylon washers for mounting: Avoid banding, crating, or stacking signs. Package for shipment in accordance with commercially accepted standards to prevent movement and Store sign packages indoors on edge.

Panels or finished signs must remain dry during shipment and storage. If packaged signs become wet, unpack immediately and allow signs to dry. See Information Folder 1.11 for instructions on packing for storage and shipment.

Storage

3M™ Process Color Series 880N should be stored at general warehouse storage (16°C/60°F to 27°C/80° F). The color has a shelf life of 12 months from customer receipt.

Environmental, Health and Safety Information

Read all health hazard, precautionary and first aid statements found in the Material Safety Data Sheet, and/or product label of chemicals prior to handling or use.

Consult federal, state and local air quality regulations that may regulate or restrict product use.

General Performance Considerations

3M process color series 880N which is processed according to 3M recommendations can be expected to provide durability for traffic sign uses comparable to that of 3M sheeting on which they are applied.

Application to other grades or types of sheeting or surfaces is not recommended. Please reference the appropriate product bulletin.

The durability of sheeting or screen processed sheeting exposed in any position other than vertical or near vertical may be significantly reduced. The durability statements expressed herein do not apply for the use of sheeting for vehicle markings. Contact your 3M sales representative to clarify the durability of such applications. See sheeting product bulletins for specific warranty details.

3M Literature Reference

PB 3430	3M™ Engineer Grade Prismatic Reflective Sheeting Series 3430
PB 3930	3M™ High Intensity Prismatic Reflective Sheeting Series 3930
PB 4000	3M™ Diamond Grade™ DG³ Reflective Sheeting Series 4000
PB 3990	3M™ Diamond Grade™ VIP Reflective Sheeting Series 3990
IF 1.4	Instructions for Operation of Interstate Squeeze Roll Applicator
IF 1.5	Hand Application Instructions for 3M™ Reflective Sheeting and Scotchcal™ Films with Pressure-Sensitive Adhesive
IF 1.7	Sign Base Surface Preparation for 3M™ Reflective Sheeting Application
IF 1.8	Application of 3M™ Process Color 700, 880 and 990 on 3M™ Reflective Sheetings
IF 1.11	Sign Maintenance Management for 3M™ Reflective Sheeting

FOR INFORMATION OR ASSISTANCE
CALL:
1-877-777-3571

IN CANADA CALL:
1-800-265-1840

Internet:
ww.3M.com/roadwaysafety

3M assumes no responsibility for any injury, loss or damage arising out of the use of a product that is not of our manufacture. Where reference is made in literature to a commercially available product, made by another manufacturer, it shall be the user's responsibility to ascertain the precautionary measures for its use outlined by the manufacturer.

Important Notice

All statements, technical information and recommendations contained herein are based on tests we believe to be reliable, but the accuracy or completeness thereof is not guaranteed, and the following is made in lieu of all warranties, or conditions express or implied. Seller's and manufacturer's only obligation shall be to replace such quantity of the product proved to be defective. Neither seller nor manufacturer shall be liable for any injury, loss or damage, direct, special or consequential, arising out of the use of or the inability to use the product. Before using, user shall determine the suitability of the product for his/her intended use, and user assumes all risk and liability whatsoever in connection therewith. Statements or recommendations not contained herein shall have no force or effect unless in an agreement signed by officers of seller and manufacturer.

3M is a trademark of 3M. Used under license in Canada.

3M

Traffic Safety & Security Division
3M Center, Building 235-3A-09
P.O. Box 33225
St. Paul, MN 55133-3225
ww.3M.com/roadwaysafety

3M Canada Company
P.O. Box 5757
London, Ontario N6A 4T1
1-800-3MHELPS

3M México, S.A. de C.V.
Av. Santa Fe No. 55
Col. Santa Fe, Del. Alvaro Obregón
México, D.F. 01210

Please recycle.

© 3M 2013. All rights reserved.

3M

Process Color

Series 990

Product Bulletin 990 **July 2010**

Replaces PB 990 dated January 2008

Description

3M™ Process Color Series 990 is transparent (except for 990-05 black which is opaque), screen printable, and quick-drying. Colors are weather resistant, have excellent color retention, and do not require clear coating. They are recommended and intended for use on 3M™ Engineer Grade Series 3200 and Series CW80 Reflective Sheetings. Application to other grades or types of reflective sheeting or substrates is not recommended and may result in premature product failure after outdoor exposure.

Series 990 process colors result in evaporation of more solvent in less time than slower drying inks; therefore, when they are dried in large volumes, sufficient ventilation and exhaust should be provided (see Information Folder 1.12 for exhaust and ventilation requirements).

The following Series 990 colors, toner, and thinner are available:

T-11A Thinner
990-00 Toner
990-03 Blue
990-04 Yellow (Warning)
990-05 Black (Opaque)
990-06 Orange
990-07 Brown
990-08 Green
990-12 Traffic Sign Red
990-13 Violet
990-14 Lemon Yellow
990-15 Magenta
991 Thinner/Retarder

Series 990 process colors are intended for use as a matched component in the production of traffic control signs. Signs made of these materials will have a similar appearance viewed from a vehicle either in the daylight or at night.

Series 990 process colors should not be blended or mixed with any other series of process colors produced by 3M or other manufacturers. 3M assumes no responsibility for premature failure of sign face legends that have been screen processed with non-3M process colors. 3M does not recommend inks made by other manufacturers.

Screen Processing

1. Equipment Set-up and Process Procedures

1.1 Proper color and durability is achieved by using a high grade monofilament polyester screen fabric of PE 157 mesh size. Other size and type of screen fabric will not produce acceptable finished color tone or satisfactory signing outdoor durability.

1.2 Screen processing should be accomplished by using off contact screening techniques. Direct contact screen printing should not be used. Refer to Information Folder 1.15 for proper off contact and other screening techniques.

1.3 Be sure that screens, sheeting and the screening and drying areas are clean of dust, dirt and lint.

1.4 Screen stencils should be the high quality water soluble type that will resist ketone and strong lacquer solvents.

1.5 A 50-60 Durometer squeegee is recommended for application of 990 inks.

2. Coverage

2.1 The coverage of Series 990 process colors, applied as recommended, will be approximately 1000 - 1200 square feet (90 - 110 square meters) per gallon.

3. Mixing and Thinning

3.1 It is important that all process colors and substrates to be screened be brought to normal ambient room temperature and humidity conditions of the screen processing area prior to screening.

3.2 The series 990 inks are formulated to be at screening viscosity directly out of the can. If a lower viscosity ink is needed for screening, there are two choices for thinners. The T11A is a general purpose thinner that will work in most applications. The 991 thinner/retarder is a more specialized thinner that will slightly increase drying times and should be used if drying in the screen is a problem. Thinners should be added sparingly and only to a point that results in a good quality screened image. Over-thinning may result in screening errors such as non-wets or "fisheyes". A good rule is to add thinner until the color lifted with the stationary propeller "piles," just slightly, on the surface as it flows back into the container.

3.3 Inks must be premixed prior to use. Shake for at least one minute by paint shaker or three minutes by hand if a paint shaker is unavailable. For best results, after shaking, pour into an open can and mix with a propeller-type high speed mixer for at least five minutes. Let stand for one hour. Cover as soon as possible after mixing and during use.

3.4 Addition of drying agents, or extenders, is not recommended, and can adversely affect process color adhesion and outdoor durability.

3.5 Colors should be used within 1 year of receival date, and should be replaced if there is any sign of contamination.

Note: If at all possible the mixing and thinning should be done the night before, and then just before screening, hand mix with a spatula.

4. Clear Coating - Edge Sealing

4.1 Clear coating and edge sealing are not required or recommended for Series 990 process colors applied to Series 3200 or CW80 sheeting.

5. Drying

NOTE: Adequate exhaust ventilation must be provided in the screening and drying areas to prevent a build up of solvent vapors which may affect drying or create a health or fire hazard. (See Information Folder 1.12 for exhaust and ventilation requirements.)

5.1 Air Drying – Signs to be air dried must be racked on open racks to allow adequate air circulation. High volume fans must be directed through the racks. Drying times will be increased by high humidity, low temperature, poor air circulation, heavy color coat, and excessive thinning. Air drying is best done at shop temperatures of 60-100°F (15-38°C) and relative humidity levels of 20 – 50%.

Flow Out Time:	10 – 20 minutes
Between Colors:	2 hours
Final Color:	3 hours

5.2 Oven Drying – Signs to be oven dried must be racked individually with at least 2 inches (5.1 cm) open space between racks for unobstructed air flow. Drying times may vary with the oven equipment. Oven dry all screened sheeting where premasked or tape carrier applications or where tape hinges are used.

Flow Out Time:	10 – 20 minutes (in air before oven drying)
Between Colors:	30 minutes @150°F (65°C)
Final Color:	30 minutes @150°F (65°C)

If the screen printed materials are not sufficiently dried, blocking or sticking of the colors to slipsheeting or to the materials themselves may occur when packaged for storage or shipment.

5.3 Conveyor Drying – Signs to be dried must be placed to allow unobstructed air flow. Conveyor oven should be adjusted to allow at least 15 seconds flow out time and at least 90 seconds in the heat zone. A chiller is needed as the final stage if immediate packaging is planned. Temperatures stated are at sign face and not necessarily oven temperatures.

Flow Out Time:	15 seconds
Between Colors:	90 seconds @ 150°F (65°C)
Final Color:	90 seconds @ 150°F (65°C)

6. Screen Cleaning

6.1 The following companies have solutions and systems to clean screens:

1. Easiway Systems, Inc.
   540 River Street
   P.O. Box 70
   Delano, MN 55328
   Tel. 800/950-3279
   Fax. 612/972-6206
2. Intercontinental Chemical Corporation (ICC)
   4660 Spring Grove Ave.
   Cincinnati, OH 45232
   Tel. 800/543-2075

These solvents or mixtures may be used for cleaning screens and equipment.

1. Four parts DPM1 - one part methylethyl-ketone
2. Xylol (Xylene)
3. Lacquer Thinner
4. T - 11A Thinner

NOTE: The first three solvents listed above are for cleaning only and should not be used as thinners for process colors. Use only T - 11A or 991 as thinners for Series 990 process colors.

6.2 For all cleaners, a final wipe with T - 11A thinner is recommended, to remove any residual contamination in the screen.

6.3 Should the screen become clogged or dried in with ink, the screen can be reopened by lightly wiping with T - 11A thinner, xylol, or a 50/50 mixture of xylol and isophorone.

6.4 CAUTION: When using solvents for clean up, it is essential that proper safety precautionary measures be observed, as recommended by the solvent manufacturer for handling such materials.

7. Slipsheeting and Packaging

7.1 Applied, screened signs may be protected with the liner from the reflective sheeting or with SCW-586 as slipsheet. Place glossy side of the slipsheet against the sign faces and package face to face and back to back. Double faced signs must have slip sheet protecting both faces of the sign.

7.2 Unapplied, screened faces do not require a slipsheet interleaved between the faces. The top face, on the stack, should be protected with slipsheet material.

8. Storage

8.1 Series 990 process colors need to be stored away from excessive heat or cold conditions, at temperatures between 60°-80°F (16°-27°C) and used within one year of the date of receival.

8.2 Dispose of all used process colors from screening. Contamination of fresh colors may occur if used process colors are mixed with fresh colors.

General Performance Considerations

Series 990 colors screen processed according to the recommendation of 3M can be expected to provide the same effective field performance as the sheeting on which it is applied.

Durability will be substantially reduced by toning the colors.

The durability of sheeting or screen processed sheeting exposed in any position other than vertical or near vertical may be significantly reduced. Contact your 3M sales representative to clarify the durability of such applications. See sheeting product bulletins for specific warranty details.

Environmental, Health and Safety Information

Read all health hazard, precautionary and first aid statements found in the Material Safety Data Sheet, and/or product label of chemicals prior to handling or use.

Consult federal, state and local air quality regulations that may regulate or restrict product use.

Literature References

IF 1.7	Surface Preparation of Substrates
IF 1.8	3M™ Series 700, 880, and 990 Process Color instructions for use on 3M™ Reflective Sheetings
PB 3200	3M™ Engineer Grade Reflective Sheeting Series 3200
PB CW80	3M™ Engineer Grade Work Zone Sheeting Series CW80

FOR INFORMATION OR ASSISTANCE
CALL:
1-800-553-1380

IN CANADA CALL:
1-800-265-1840

Internet:
www.3M.com/tss

3M assumes no responsibility for any injury, loss or damage arising out of the use of a product that is not of our manufacture. Where reference is made in literature to a commercially available product, made by another manufacturer, it shall be the user's responsibility to ascertain the precautionary measures for its use outlined by the manufacturer.

Important Notice

All statements, technical information and recommendations contained herein are based on tests we believe to be reliable, but the accuracy or completeness thereof is not guaranteed, and the following is made in lieu of all warranties, or conditions express or implied. Seller's and manufacturer's only obligation shall be to replace such quantity of the product proved to be defective. Neither seller nor manufacturer shall be liable for any injury, loss or damage, direct, special or consequential, arising out of the use of or the inability to use the product. Before using, user shall determine the suitability of the product for his/her intended use, and user assumes all risk and liability whatsoever in connection therewith. Statements or recommendations not contained herein shall have no force or effect unless in an agreement signed by officers of seller and manufacturer.

3M is a trademark of 3M. Used under license in Canada.

3M

Traffic Safety Systems Division
3M Center, Building 235-3A-09
St. Paul, MN 55144-1000
1-800-553-1380
www.3M.com/tss

3M Canada Company
P.O. Box 5757
London, Ontario N6A 4T1
1-800-3MHELPS

3M México, S.A. de C.V.
Av. Santa Fe No. 55
Col. Santa Fe, Del. Alvaro Obregón
México, D.F. 01210

Please recycle.
© 3M 2010. All rights reserved.
Bolger 10080473
Electronic Only

Vendor:					
See Scope of work for specifications. You must bid on all items in section.					

Section 1 - Traffic Sign Retroreflective Sheeting & Associated Materials

Item (1A) Engineer Grade Prismatic Retroreflective Sheeting, ASTM D4956 Type I

Estimated Annual Usage	Unit of Measure	Product Description	Unit Price	Extended Price	Manufacturer and Code #
8,000	Sq. Ft.	Pressure Sensitive (All Traffic Colors) (does not include red, blue, and brown)	$0.90	$7,200.00	3M 3430 Series and 7300 Series

Item (1B) High Intensity Grade Microprismatic Lens Retroreflective Sheeting, ASTM D4956 Type IV

Estimated Annual Usage	Unit of Measure	Product Description	Unit Price	Extended Price	Manufacturer and Code #
40,000	Sq. Ft.	Pressure Sensitve (All Traffic Colors)	$0.98	$39,200.00	3M 3930 Series

Item (1C) Cube Corner Microprismatic Retroreflective Sheeting, ASTM D4959 Type VIII

Estimated Annual Usage	Unit of Measure	Product Description	Unit Price	Extended Price	Manufacturer and Code #
8,000	Sq. Ft.	All Standard Colors (Except Fluorescent	$1.72	$13,760.00	3M DG3 - 4090
2,500	Sq. Ft.	Flourescent Orange	$1.72	$4,300.00	3M DG3 - 4084
6,000	Sq. Ft.	Flourescent Yellow	$1.72	$10,320.00	3M DG3 - 4081
3,000	Sq. Ft.	Flourescent Yellow-Green	$1.72	$5,160.00	3M DG3 - 4083

Item (1D) Cube Corner Microprismatic Retroreflective Sheeting, ASTM D4959 Type IX

Estimated Annual Usage	Unit of Measure	Product Description	Unit Price	Extended Price	Manufacturer and Code #
2,500	Sq. Ft.	All Standard Colors (Except Fluorescent	$1.72	$4,300.00	3M DG3 - 4090 Series
1,500	Sq. Ft.	Flourescent Orange	$1.72	$2,580.00	3M DG3 - 4084
1,500	Sq. Ft.	Flourescent Yellow	$1.72	$2,580.00	3M DG3 - 4081
1,500	Sq. Ft.	Flourescent Yellow-Green	$1.72	$2,580.00	3M DG3 - 4083

Item (1E) Cube Corner Microprismatic Retroreflective Sheeting, ASTM D4959 Type XI

Estimated Annual Usage	Unit of Measure	Product Description	Unit Price	Extended Price	Manufacturer and Code #
2,000	Sq. Ft.	All Standard Colors (Except Fluorescent	$1.72	$3,440.00	3M DG3 - 4090 Series
2,000	Sq. Ft.	Flourescent Orange	$1.72	$3,440.00	3M DG3 - 4084
2,000	Sq. Ft.	Flourescent Yellow	$1.72	$3,440.00	3M DG3 - 4081
2,000	Sq. Ft.	Flourescent Yellow-Green	$1.72	$3,440.00	3M DG3 - 4083

Item (1F) Overlay Films for use with Retroreflective Sheeting

Estimated Annual Usage	Unit of Measure	Product Description	Unit Price	Extended Price	Manufacturer and Code #

2,000	Sq. Ft.	Overlay Film (3M Series 1170 or Equivalent) Clear	$0.77	$1,540.00	3M 1170 (clear)
20,000	Sq. Ft.	Overlay Film (3M Series 1170 or Equivalent) Colors	$0.80	$16,000.00	3M 1170 (colors)

Item (1G) Overlay Films for use with Retroreflective Sheeting					
Estimated Annual Usage	**Unit of Measure**	**Product Description**	**Unit Price**	**Extended Price**	**Manufacturer and Code #**
1,200	Sq. Ft.	Premium Anti-Graffiti Film (3M Series 1160 or Equivalent) Clear	$1.30	$1,560.00	3M 1160i

Total for section 1: $124,840.00

Section 2 - Vehicle Marking Sheeting & Associated Materials

Item (2A) Enclosed Lens Vehicle Markings, Removable & Non-removable

Estimated Annual Usage	Unit of Measure	Product Description	Unit Price	Extended Price	Manufacturer and Code #
800	Sq. Ft.	Removable - White		$0.00	
1,500	Sq. Ft.	Removable - Color		$0.00	
800	Sq. Ft.	Non-removable - White		$0.00	
1,200	Sq. Ft.	Non-removable - Color		$0.00	

Note: Items 1A: Screen inks, process colors, toners, clears and slip sheeting shall be specifically formulated for used with sheeting of items 1A and shall be supplied at no charge.

Item (2B) Retroreflective Markings for Vehicle Conspicuity

(Wide angle prismatic retroreflective sheeting for use on vehicles for vehicle conspicuity per NHTSA amendments FMVSS #108 49CFR571)

Estimated Annual Usage	Unit of Measure	Product Description	Unit Price	Extended Price	Manufacturer and Code #
500	Sq. Ft.	Rigid - White		$0.00	
1,500	Sq. Ft.	Rigid - All Standard Colors		$0.00	
500	Sq. Ft.	Flexible - White		$0.00	
800	Sq. Ft.	Flexible - All Standard Colors		$0.00	

Total for section 2: $0.00

Section 3 - Non-reflective & Retroreflective Plastic & Vinyl Film

Item (3A) Pressure Sensitive, Non-reflective Sheeting, 2 Mil Cast, 6 Year Durability

Estimated Annual Usage	Unit of Measure	Product Description	Unit Price	Extended Price	Manufacturer and Code #
150	Sq. Ft.	12" x 50 Yards		$0.00	
200	Sq. Ft.	15" x 50 Yards		$0.00	
300	Sq. Ft.	24" x 50 Yards		$0.00	
400	Sq. Ft.	30" x 50 Yards		$0.00	
450	Sq. Ft.	36" x 50 Yards		$0.00	
600	Sq. Ft.	48" x 50 Yards		$0.00	

Item (3B) Positionable Pressure Sensitve, Non-reflective Sheeting, 2 Mil Cast, 6 Year Durability

Estimated Annual Usage	Unit of Measure	Product Description	Unit Price	Extended Price	Manufacturer and Code #
150	Sq. Ft.	12" x 50 Yards		$0.00	
200	Sq. Ft.	15" x 50 Yards		$0.00	
300	Sq. Ft.	24" x 50 Yards		$0.00	
400	Sq. Ft.	30" x 50 Yards		$0.00	
450	Sq. Ft.	36" x 50 Yards		$0.00	
600	Sq. Ft.	48" x 50 Yards		$0.00	

Total for section 3: $0.00

Section 4 - Non-reflective & Retroreflective Plastic & Vinyl Film					
Item (4A) Pressure Sensitive, Non-reflective Sheeting, 2 Mil Cast, 6 Year Durability					
Estimated Annual Usage	Unit of Measure	Product Description	Unit Price	Extended Price	Manufacturer and Code #
12	Sq. Ft.	24" x 100 Yards		$0.00	
6	Sq. Ft.	30" x 100 Yards		$0.00	
8	Sq. Ft.	36" x 100 Yards		$0.00	
3	Sq. Ft.	48" x 100 Yards		$0.00	

Total for section 4: $0.00